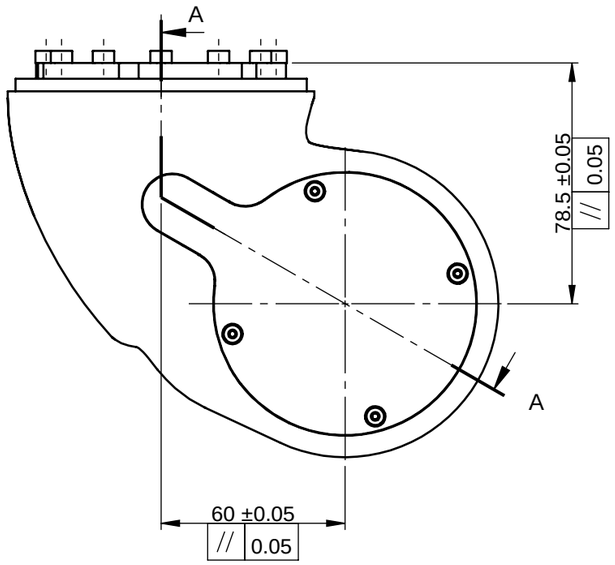


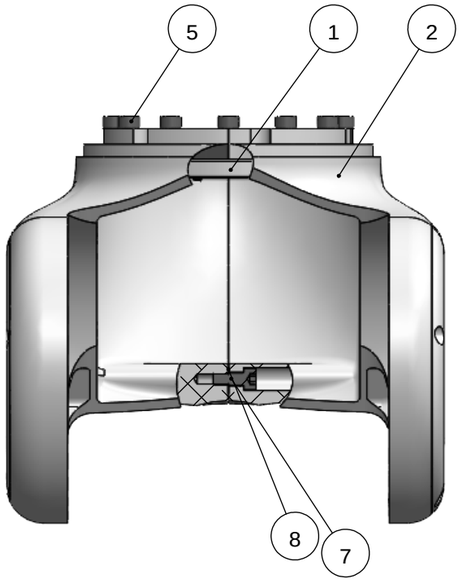


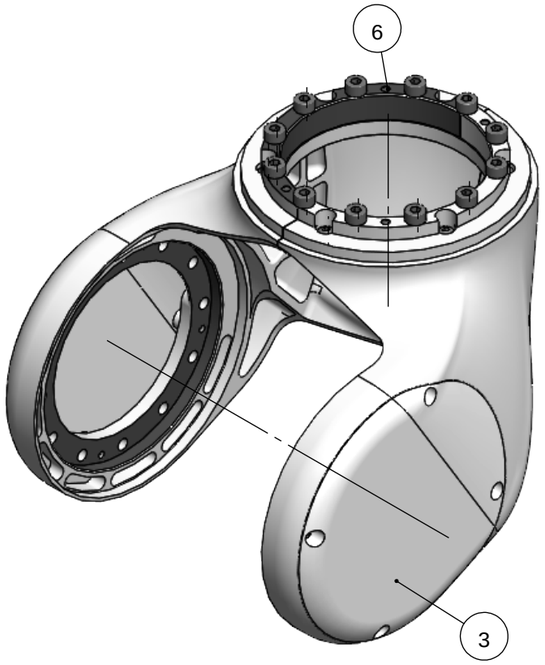


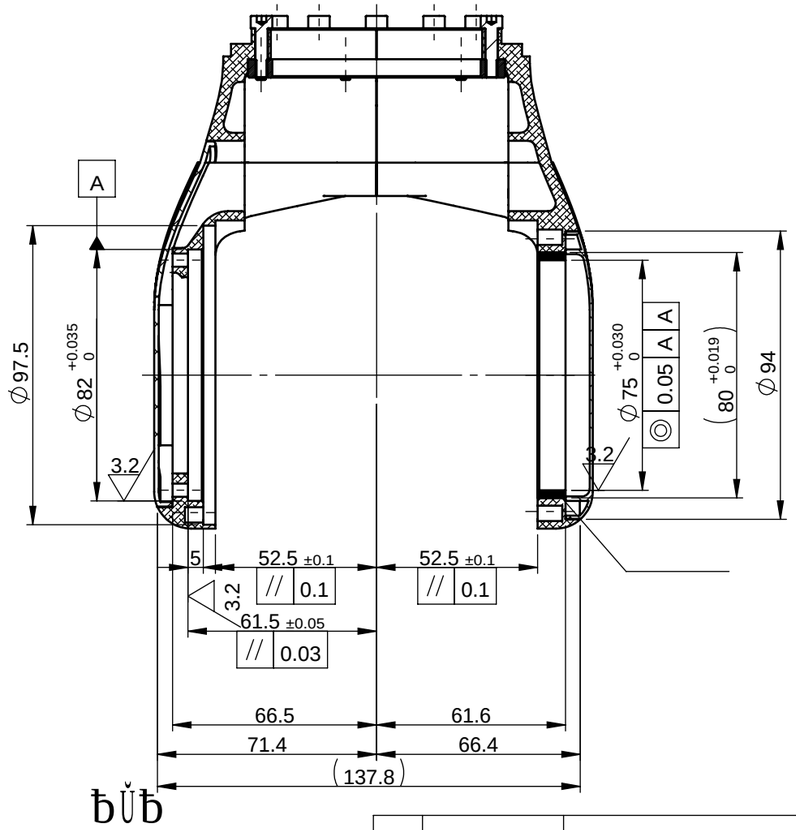


| | | | | |
|---|---|---|---|---|
| 1 | DJ17TSS034T | DJ17 Y | 1 | |
| 2 | DJ25KDD031T | DSJ25T | 1 | |
| 3 | DJ25KDD033T | | 1 | |
| 4 | JIS B 1174 M3 x 10 (10) --N | | 6 | |
| 5 | JIS B 1176 M4 x 16 (16) --N | | 12 | |
| 6 | MSV3-16 | Pin | 4 | MSV*-* |
| 7 | JIS B 1176 M4 x 10 (10) --N | | 1 | |
| 8 | ( CIMRS3-10-0.2) | | 1 | CIMRSF-D32-V29-T0.1 |
| 9 | DJ25KDD039B | DSJ25T | 1 | |
| 10 | DJ25KDD039A | DSJ25T | 1 | |
| 11 | JIS B 1174 M3 x 6 (6) --N | | 8 | |

12.5 3.2 ( )

:

1. Pin 0.2t DJ25KDD031T DJ17TS S034T
2.
3. :

| | |
|---|---|
| >0 | ±0.1 |
| >6 | ±0.2 |
| >30 | ±0.3 |
| >120 | ±0.5 |
| >400 | ±0.8 |
| >1000 | ±1.2 |

±0.3
+0.25 -0.05
±1°

2026/8/4
2026/8/4

Industrial Technology Research Institute

1:2

DJ25KDD300T