REV	ECN NO.	DESCRIPTION	LOCATION	DRAWN	DATE

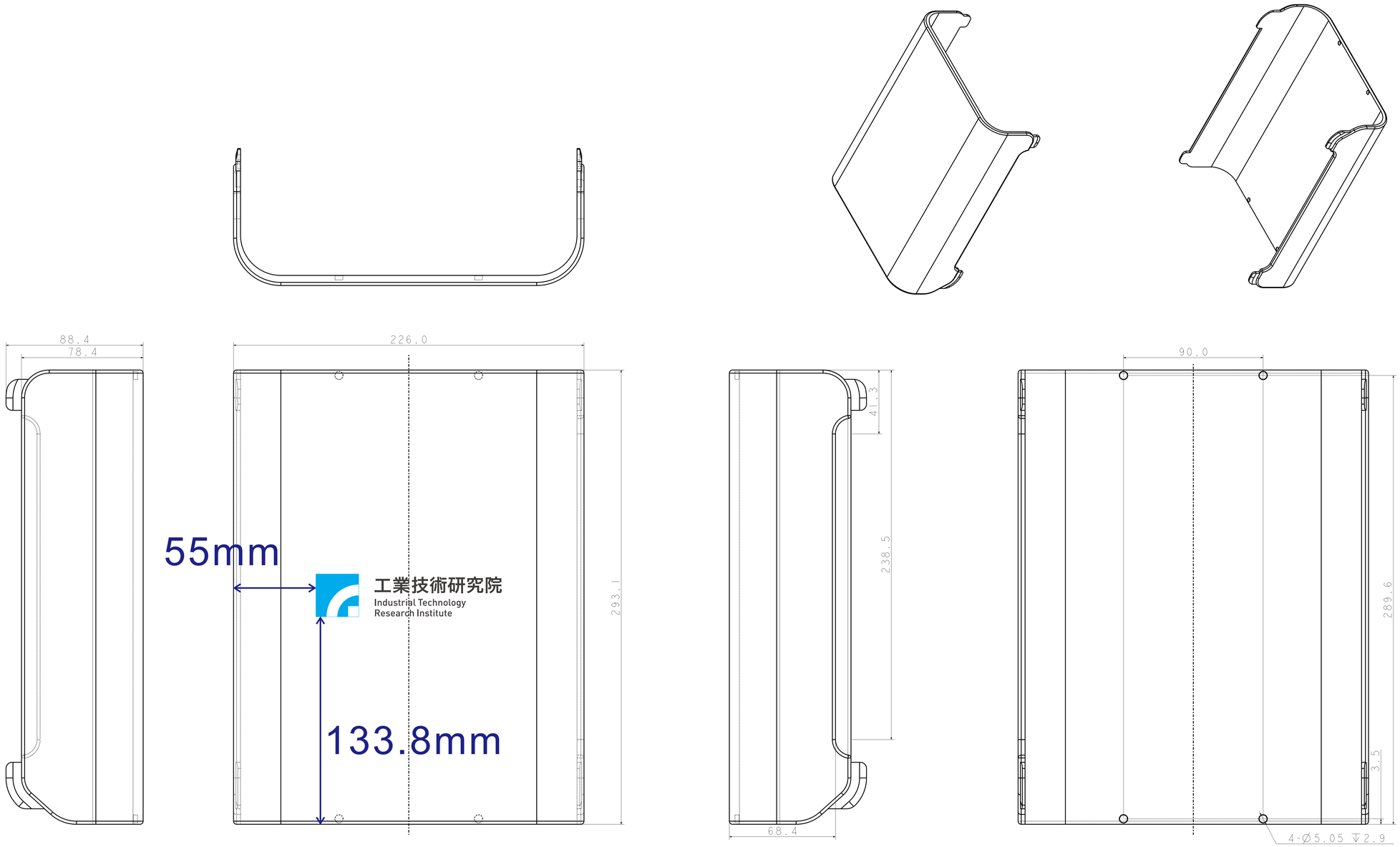

工業技術研究院
Industrial Technology
Research Institute

尺寸及顏色定義:

PANTONE 2925 C BLACK

工業技術研究院
Industrial Technology
Research Institute

27.8

01					
ITEM	Back Ground Color	Text & Icon Color	Material	FINISH	P/N

TOL± / RANGE	V		
	f	m	c
0~6	0.05	0.10	0.15
6~30	0.10	0.15	0.20
30~120	0.10	0.15	0.30
120~300	0.15	0.20	0.50
300~600	0.20	0.25	0.80
600~1200	0.35	0.50	1.50
ANGLES TOL±		1°	

TITLE: SCAN_FRONT

PART NO.: TBD

THE 3RD PROJECTION

UNIT: mm

DWG NO.: TBD

MODEL NAME: TBD

DRAWN: TBD DATE: Aug-31-26

DESIGN: TBD DATE: Aug-31-26

APPROVED: DATE:

SHEET: 1 OF 1 SCALE: 1:1

REV.

ISO A0