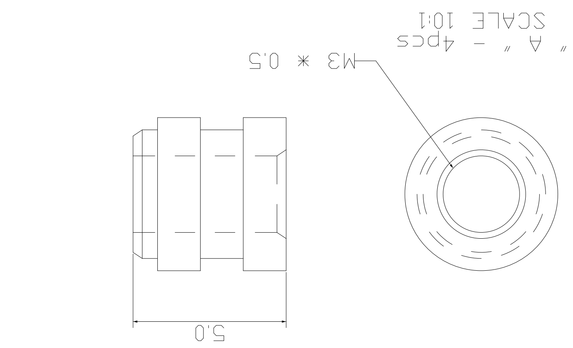

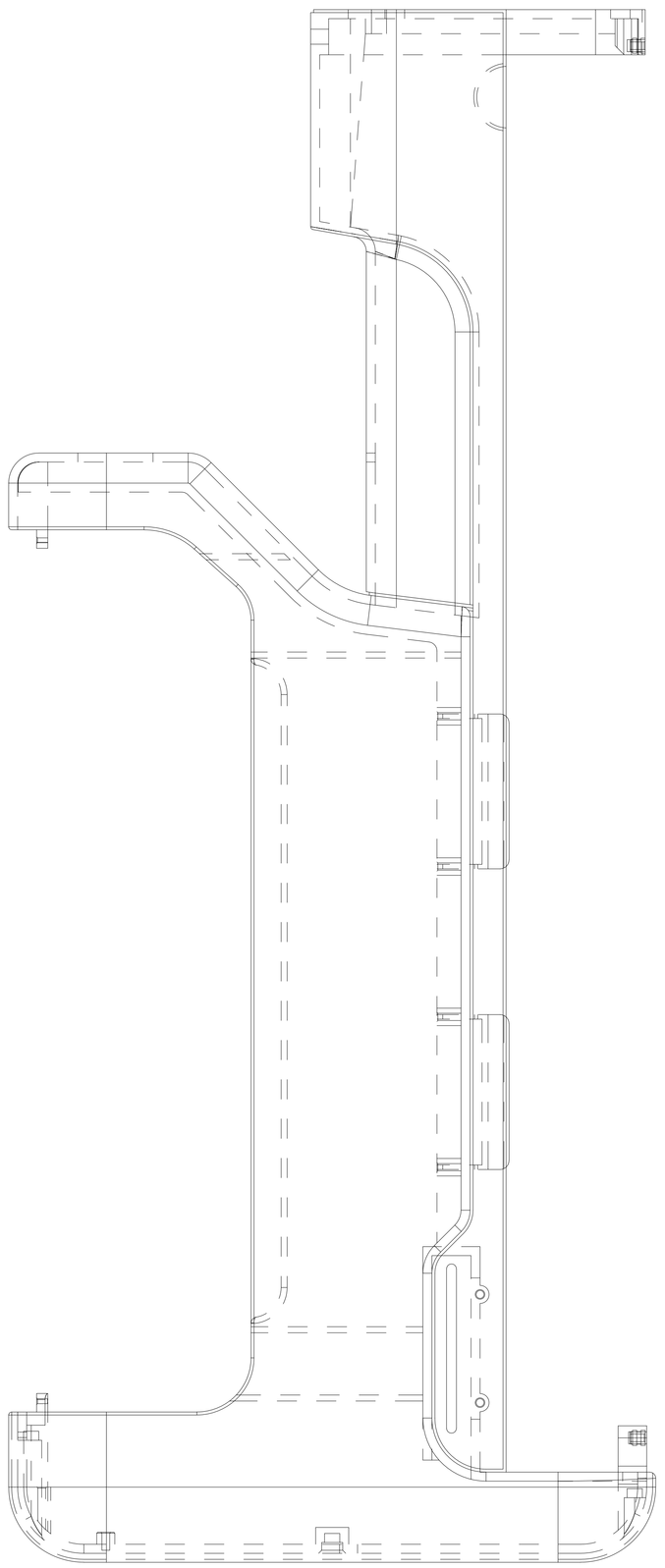

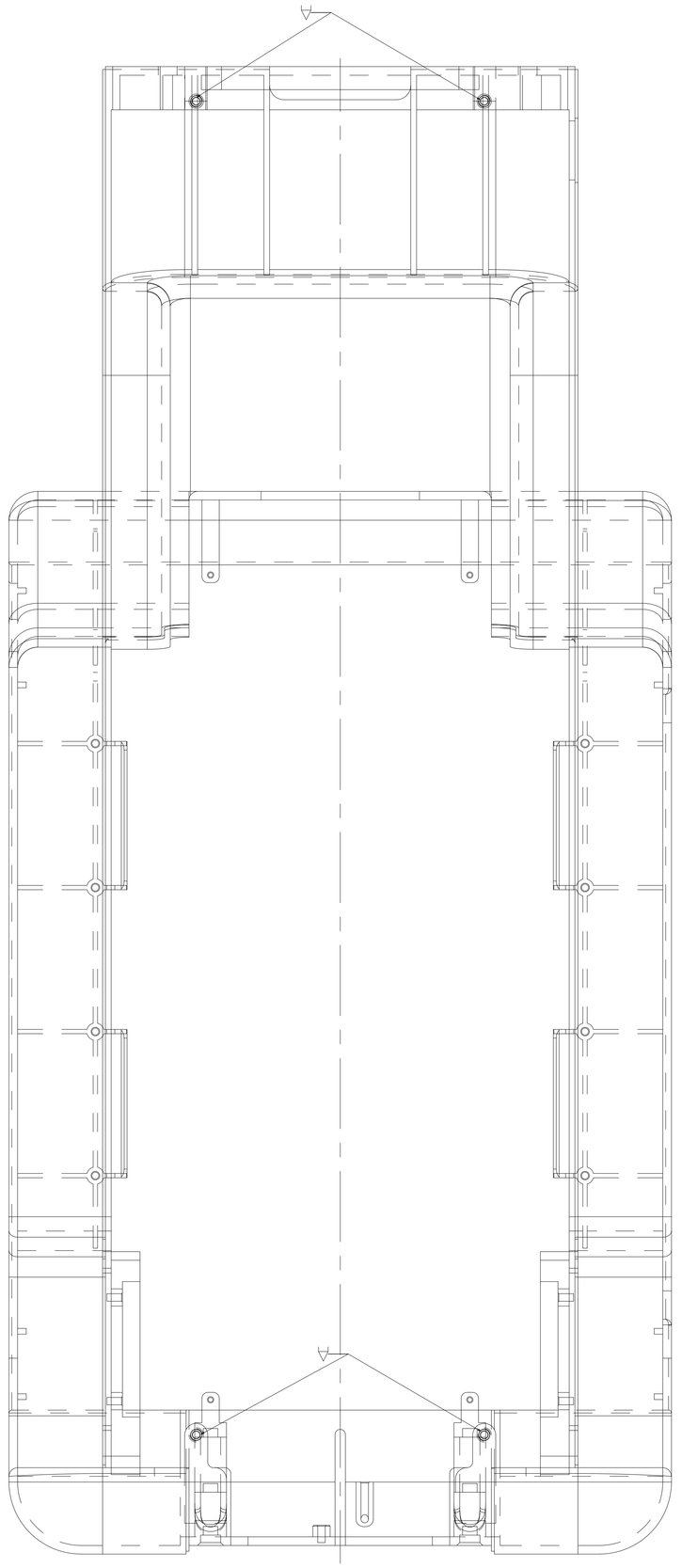

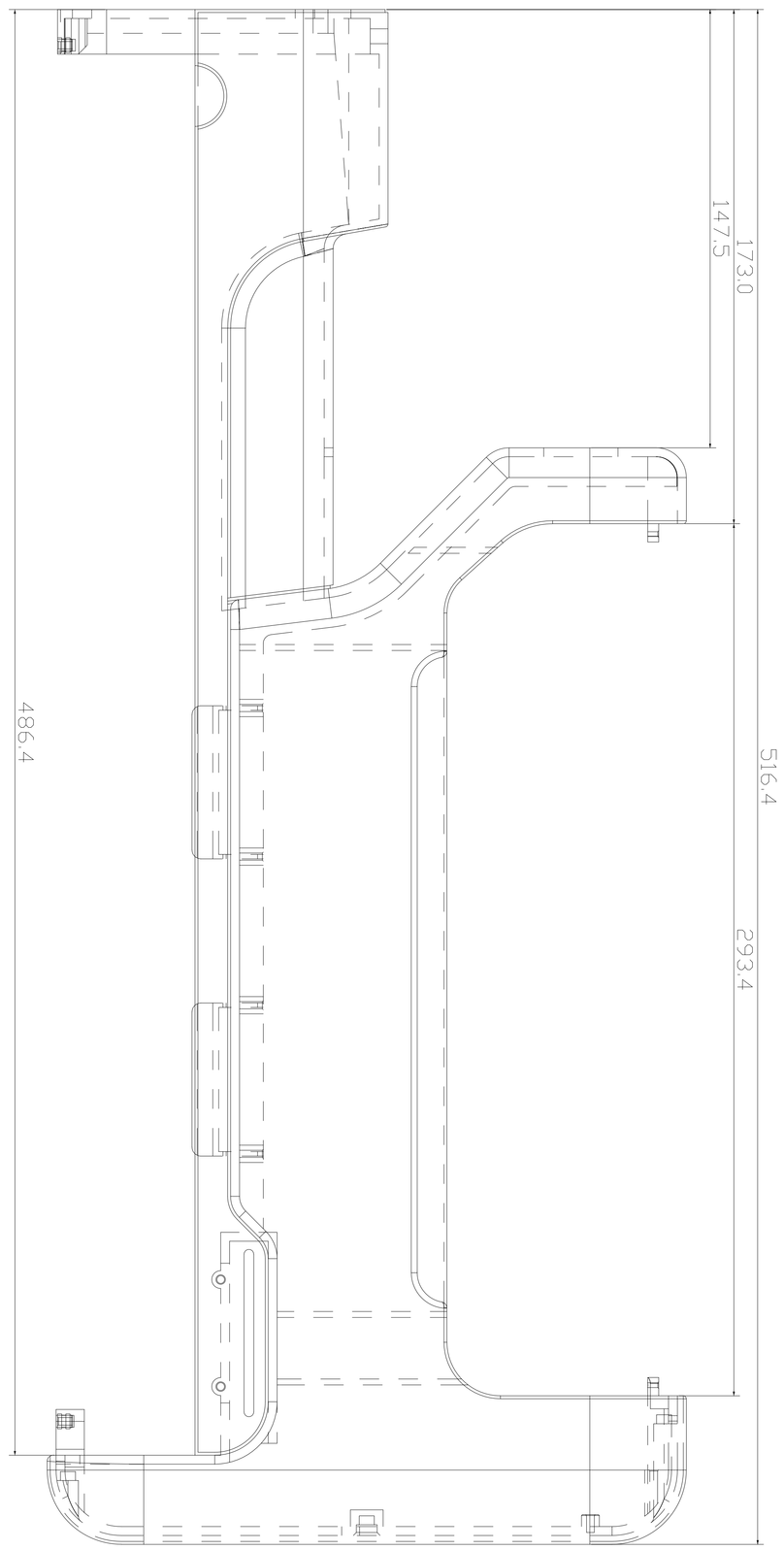

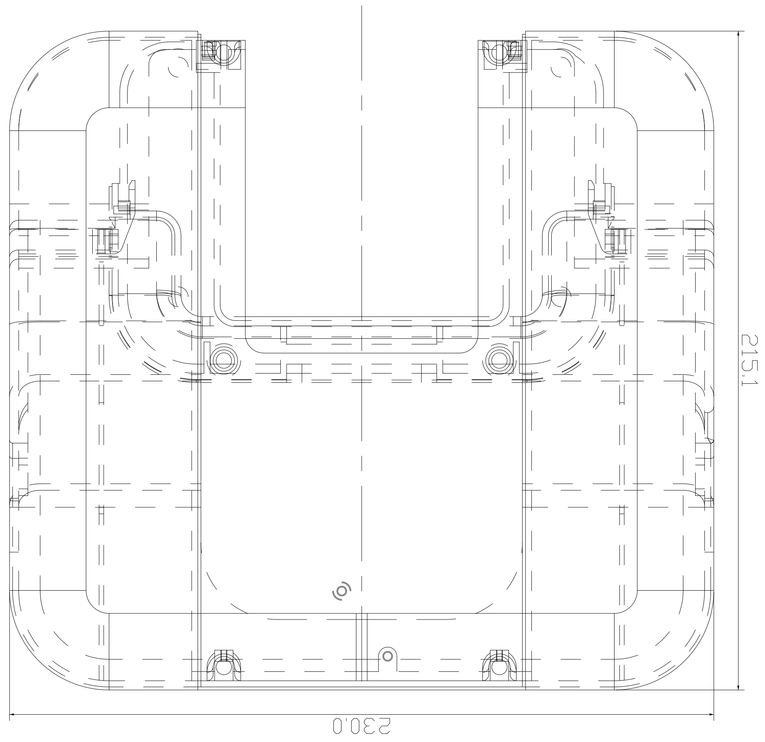

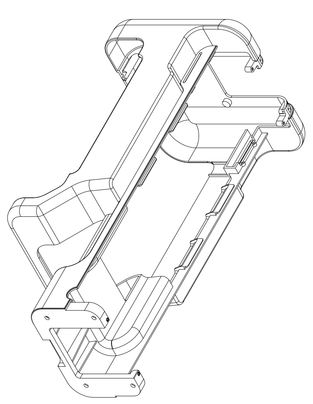

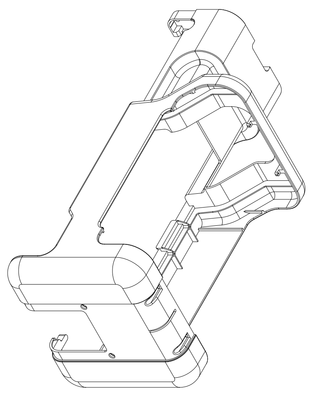

ITEM	Back Ground Color	Text & Icon Color	Material	FINISH	P/N
01					

TOL'			
RANGE	F	M	C
0-6-	0.05	0.10	0.15
6-30-	0.10	0.15	0.20
30-120-	0.10	0.15	0.30
120-300-	0.15	0.20	0.50
300-600-	0.20	0.25	0.80
600-1200	0.35	0.50	1.50
ANGLES TOL'		1~	

MODEL NAME:	TBD
TITLE:	SCAN_MAIN
DRAWN	TBD
DATE:	Aug-31-26
DESIGN	TBD
DATE:	Aug-31-26
PART NO.	TBD
APPROVED	
DATE:	
UNIT:	MM
SCALE:	1:1
THE 3RD PROJECTION	
SHEET 1 OF 1	
DWG NO	TBD
REV	

REV	ECN NO	DESCRIPTION	LOCATION	DRAWN	DATE

ISO A0