| TOTEK REV. | CUS REV. | DESCRIPTION | ECN NO. | DESIGN | DATE |
|---|---|---|---|---|---|
| 01 | / | NEW DRAWINGS | | Bob | 2026-07-08 |

ROHS 2.0 COMPLIANT

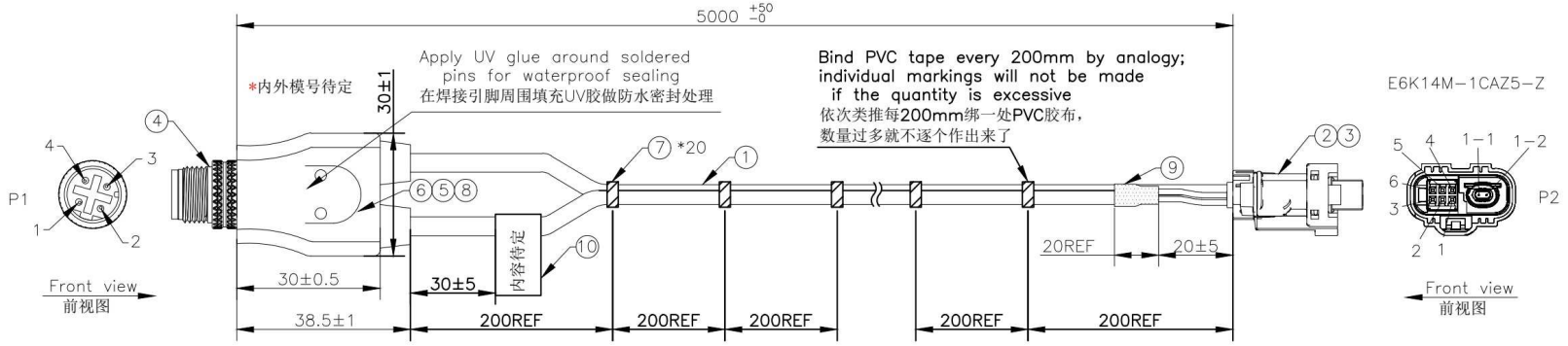


ELECTRICAL TESTING:

1.100% OPEN, SHORT ,MISS WIRE & INTERMITANCE TEST;
产品必须100%进行断路、短路,错位及间隙性接触测试;

2.CODUCTIVE RESISTANCE: 5 ohm Max;
导通电阻:5 ohm Max;

3.INSULATION RESISTANCE: 100M ohm Min/500V DC, 0.1S;
绝缘阻抗:100M ohm Min/500V DC, 0.1S.

4.0.5mm² pull test 6 kgf(Min.)
0.5mm² 拉力测试 6 kgf(最小).

5.CABLE WORKMANSHIP ACCORDING TOQC/T29106-2014
线束加工工艺标准遵循QC/T29106-2014

6.Leak current: Max 1.5mA.
泄漏电流:最大值1.5mA.

7.Withstand voltage: AC 500V, 0.1s.
耐压:交流500V，持续0.1秒.

8.Waterproof rating: IP67 compliant.
防水等级：符合 IP67 标准.

PIN OUT

| P1 | | P2 |
|---|---|---|
| 1 | White | 1-1 |
| 2 | Green | 1-2 |
| 3 | Red | 1 |
| 4 | Black | 6 |

TPA 已锁定 TPA Locked

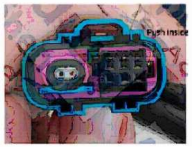

TPA 已解锁 TPA Unlocked

| No. | P/N | Part Name | Description | Q'TY | Unit |
|---|---|---|---|---|---|
| 10 | 007022044 | Label | White Label 30*70mm | 1 | PCS |
| 9 | | H.S.T | Black H.S.T Øxx L=20mm | 20 | MM |
| 8 | 00502255 | Glue | UV Glue 3169 K | 3 | G |
| 7 | 00502227 | Tape | Yongle 863 Black PVC Insulating Tape W=19mm L=60mm*20PCS | 1200 | MM |
| 6 | 0030101061000 | Outer mould | Black PVC 45P | 6 | G |
| 5 | 007011 | Inner mould | LD-PE | 3 | G |
| 4 | 00219082 | Connector | M12 4Pin D CODE Male Brass Gold G/F IP67 | 1 | PCS |
| 3 | 002033460 | Terminal | TE 5-968221-1 18-20 AWG Tin | 2 | PCS |
| 2 | | semi-finished product | E6K14M-1CAZ5-Z +GG 2Speed 251 TO Open | 1 | PCS |
| 1 | | Cable | FLRYY-B 0.5mm²*2C | A/R | MM |

STEREN

| P/N: 4027-02 | DRAW: | DRAWING NO: L01589 | | |
|---|---|---|---|---|
| | CHKD: | TITLE: | | |
| UNIT: mm / SIZE: A4 | APPD: | SCALE: NONE | SHEET: 1/1 | REV: 01 |