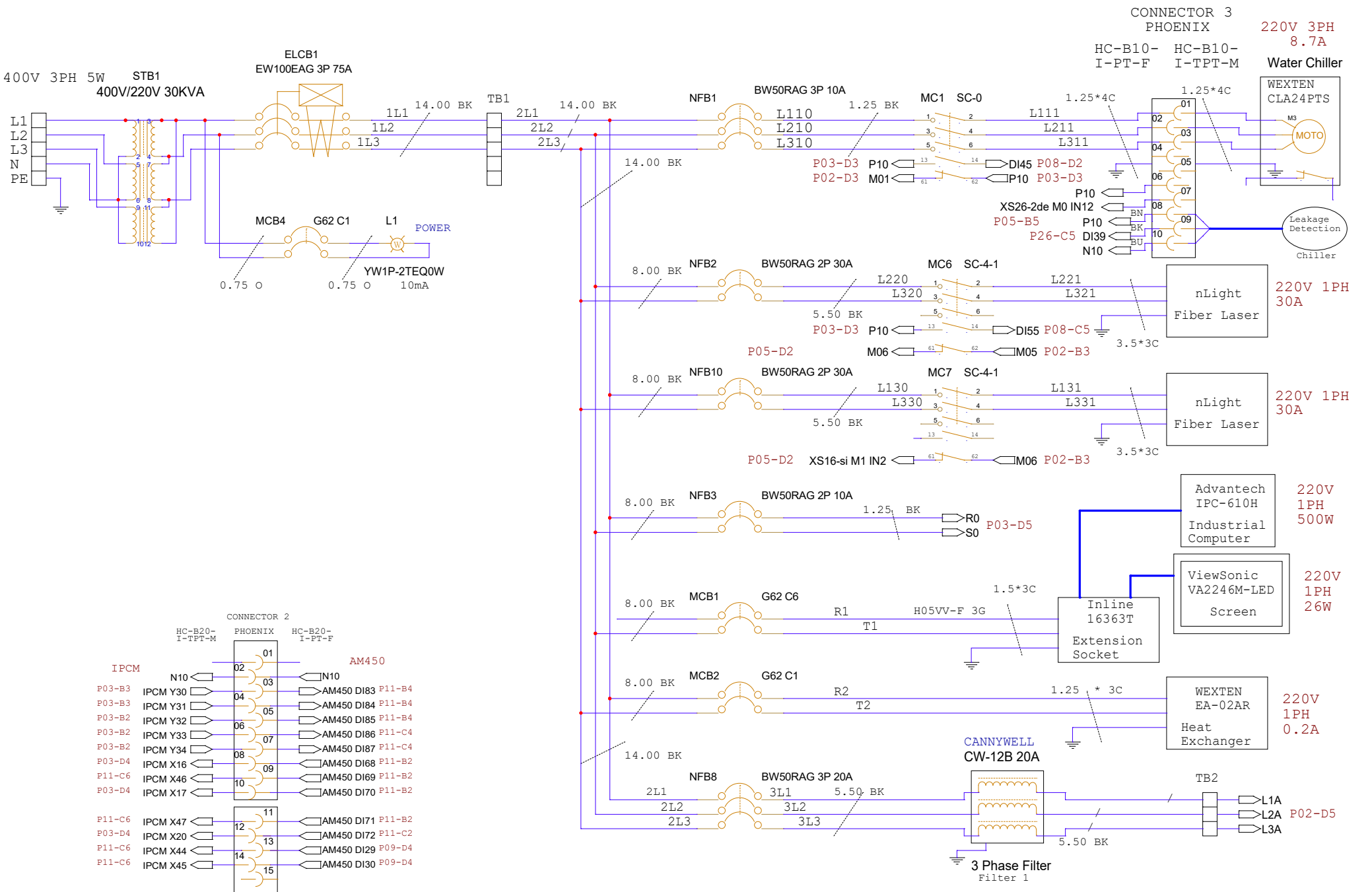

Title	AM450 Main Power _1 (220V)	
Size A	Document Number P01	Rev A
Date: Tuesday, April 02, 2024	Sheet 1 of 1	

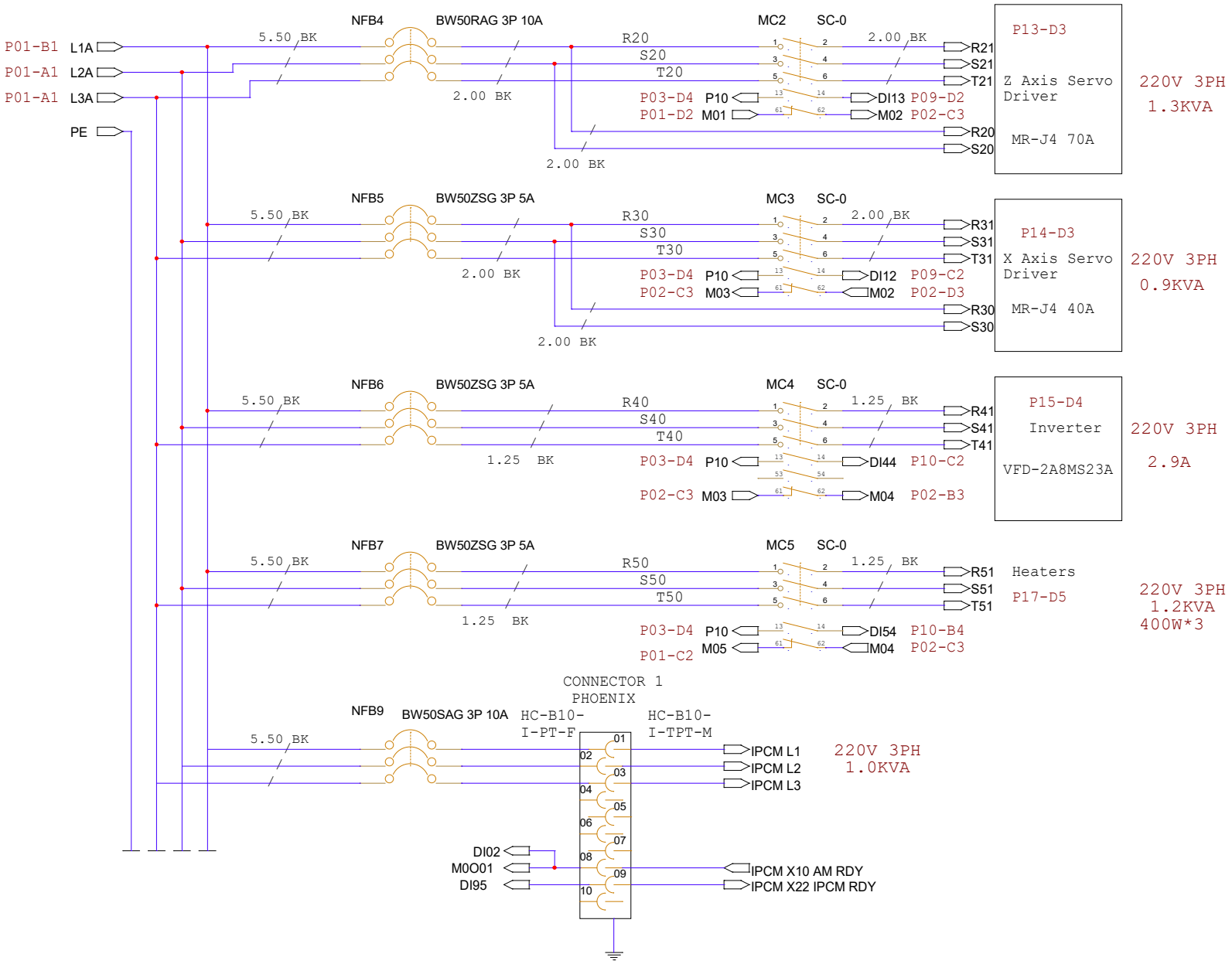

Title	AM450 Main Power_2	
Size A	Document Number P02	Rev C
Date: Tuesday, April 02, 2024	Sheet 2 of 2	

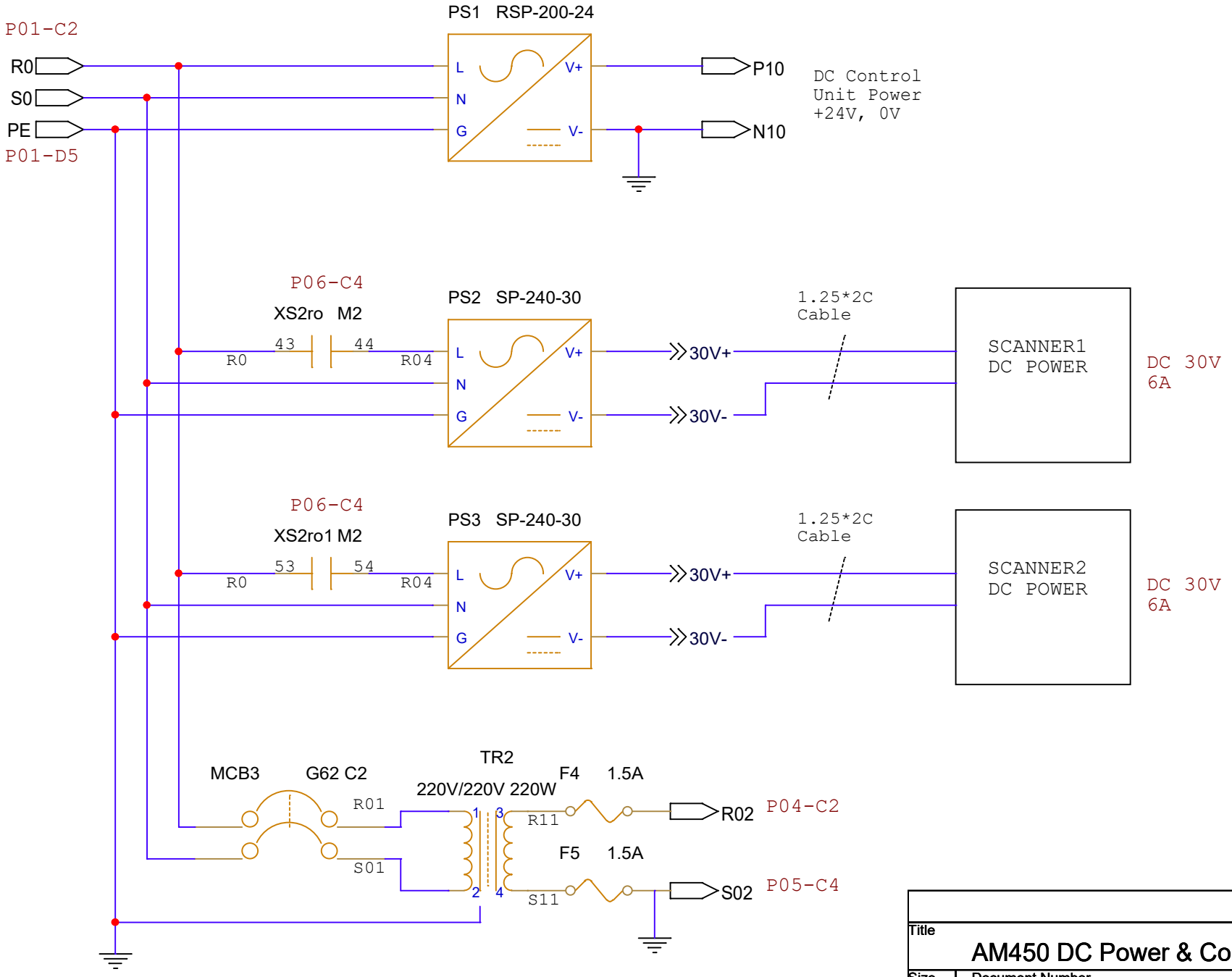

Title	AM450 DC Power & Control Power	
Size A	Document Number P03	Rev C
Date: Tuesday, April 02, 2024	Sheet 1 of 1	

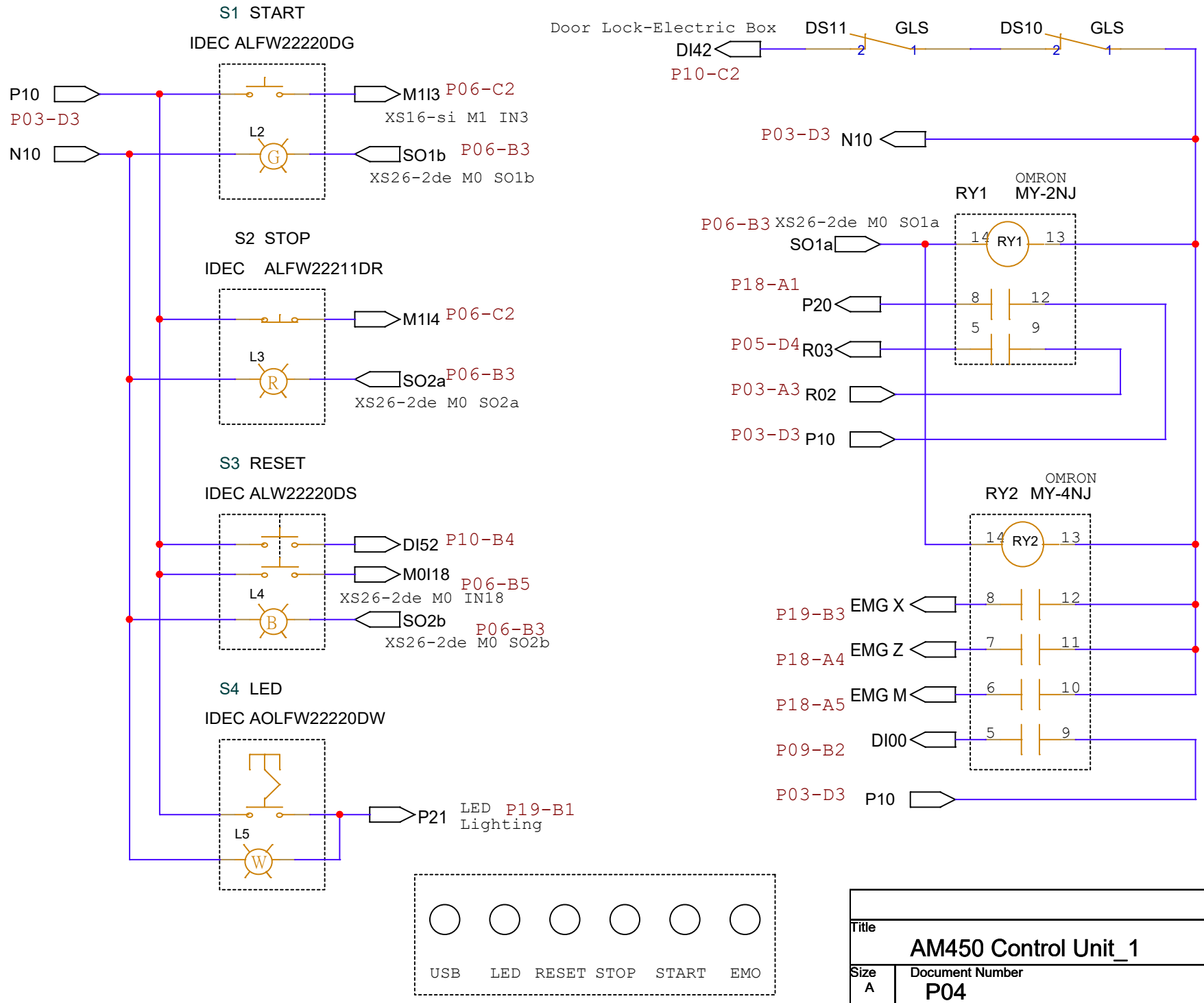

Title	AM450 Control Unit_1		
Size A	Document Number P04		Rev A
Date: Tuesday, April 02, 2024		Sheet 1 of 1	

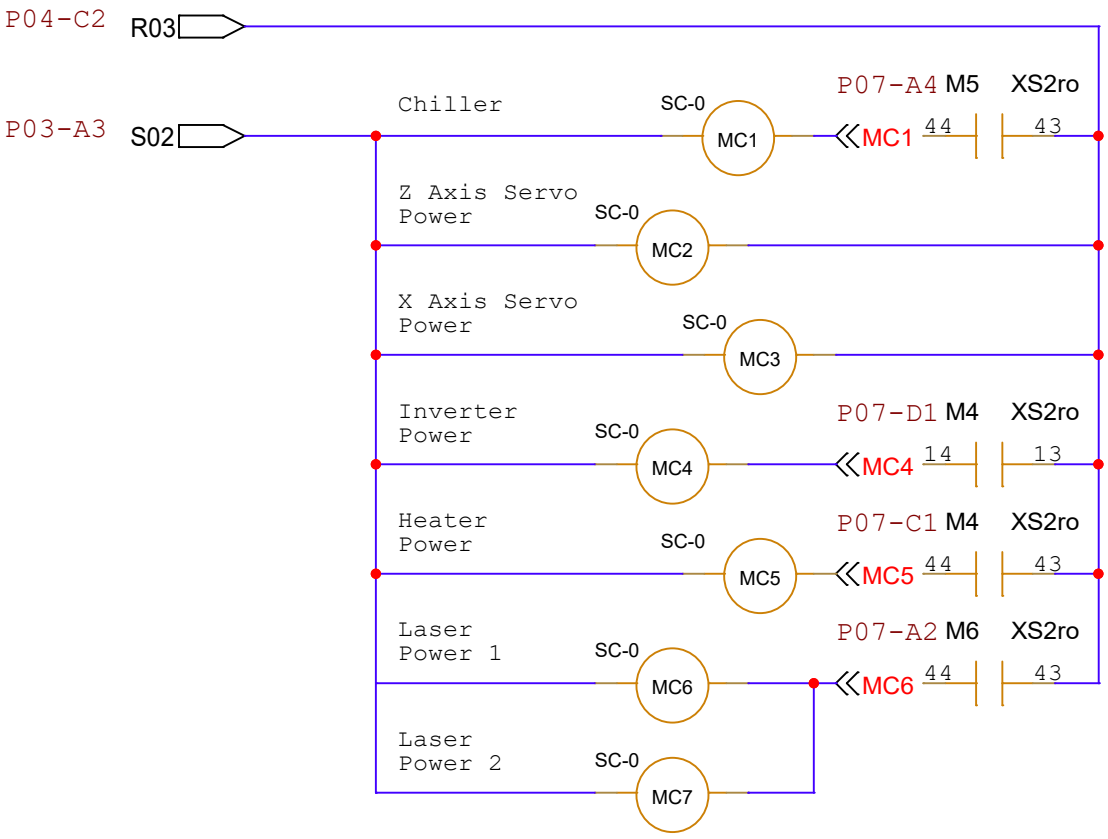

Title	AM450 Control Unit 2	
Size A	Document Number P05	Rev A
Date: Tuesday, April 02, 2024	Sheet 1 of 1	

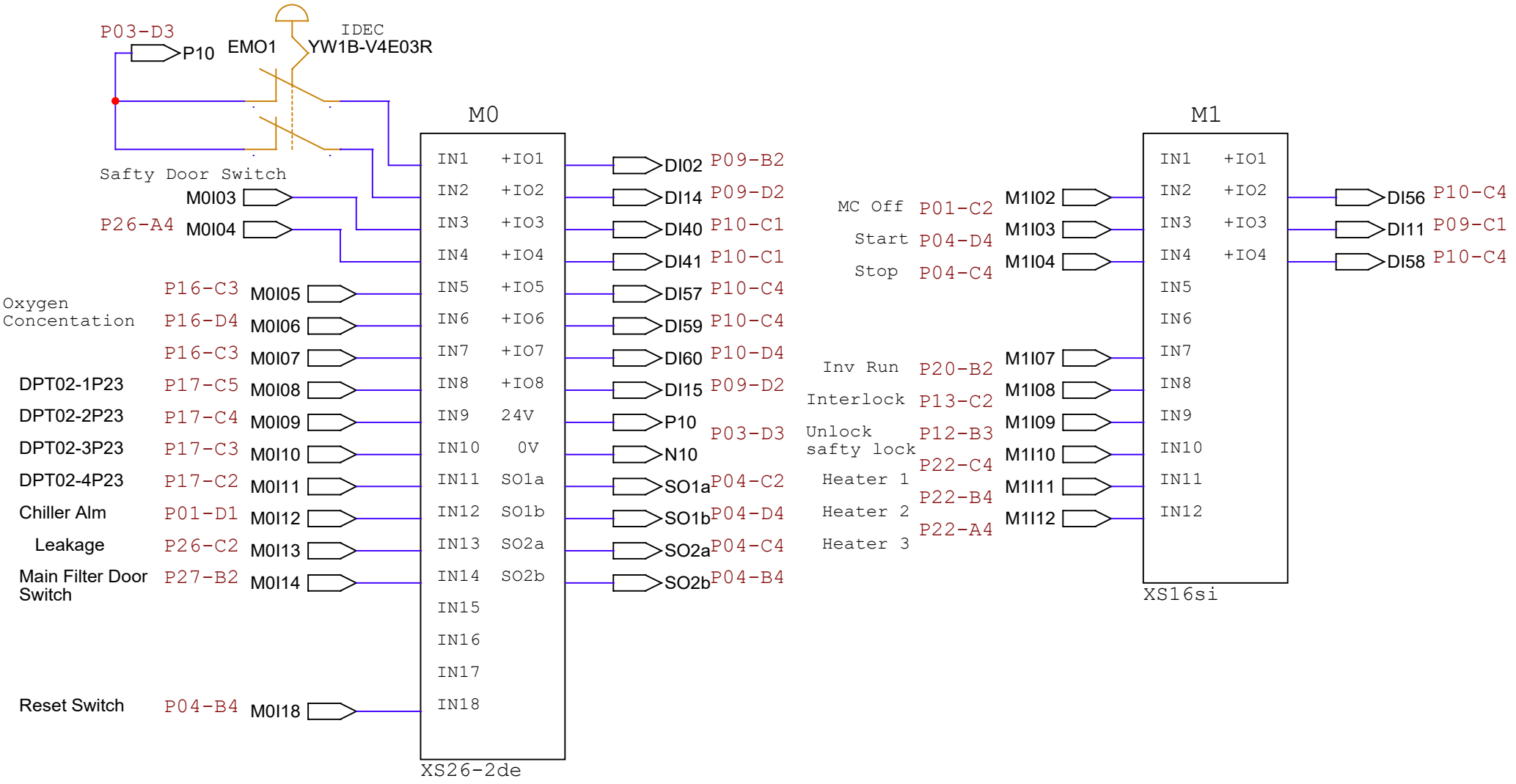

Title	AM450 Safety Controller	
Size A	Document Number P06	Rev C
Date: Tuesday, April 02, 2024	Sheet 1 of 1	

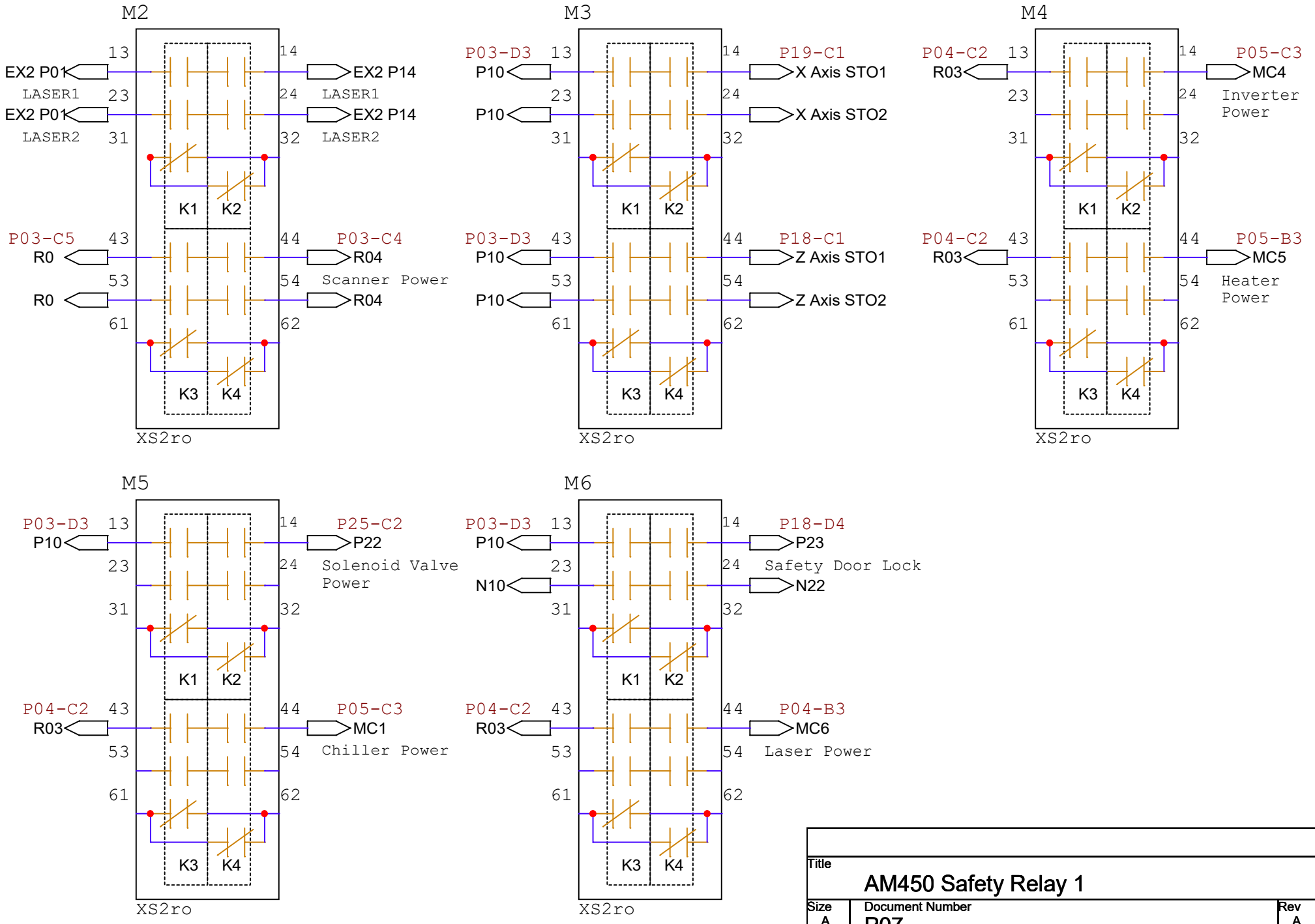

Title	AM450 Safety Relay 1	
Size A	Document Number P07	Rev A
Date: Tuesday, April 02, 2024	Sheet 1 of 1	

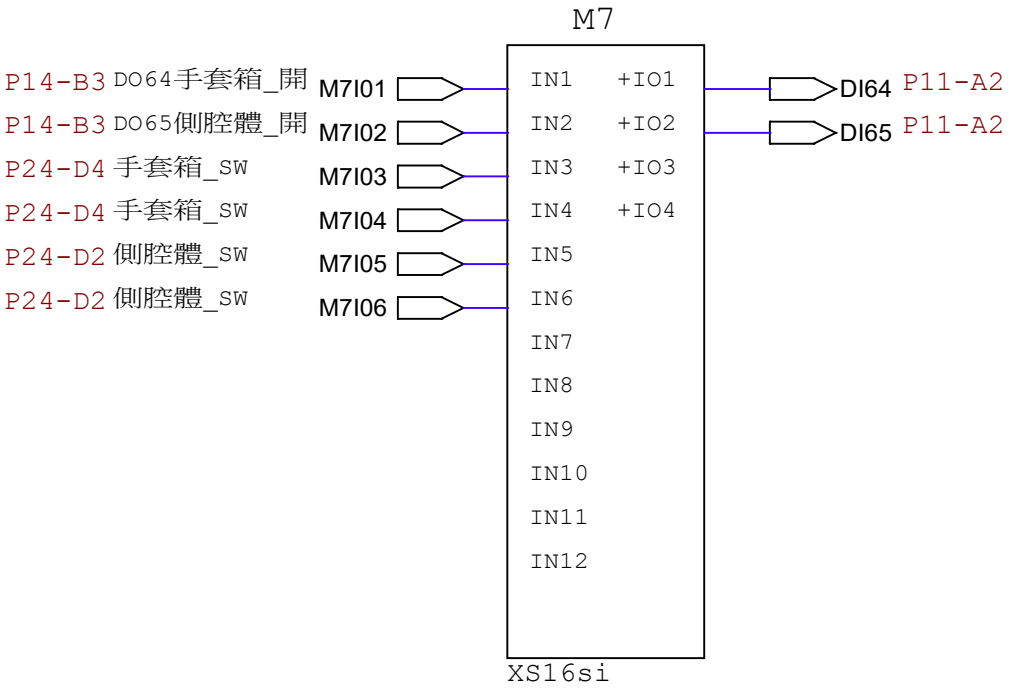

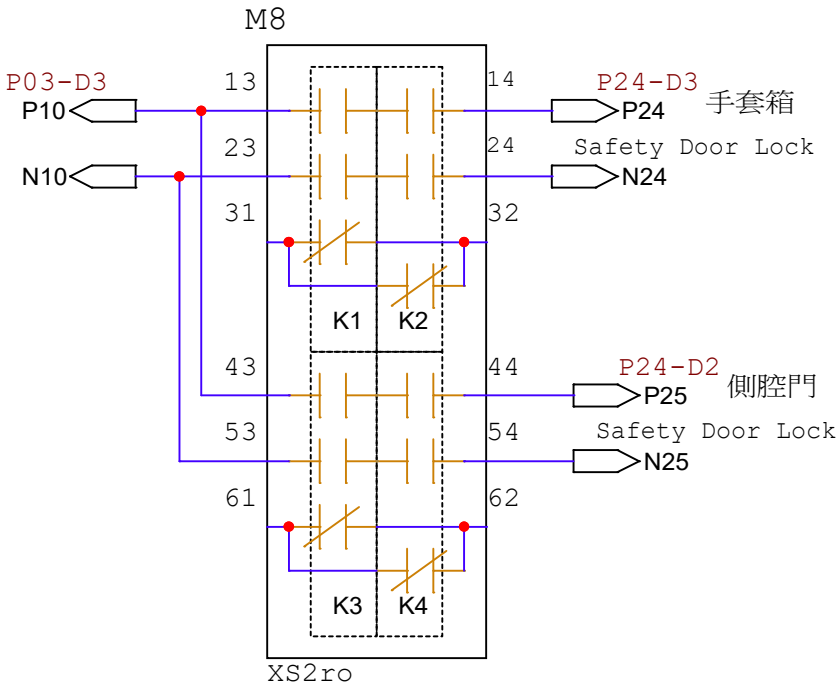

Title: AM450 Safety Relay 2		
Size: A	Document Number: P08	Rev: A
Date: Tuesday, April 02, 2024	Sheet 1 of 1	

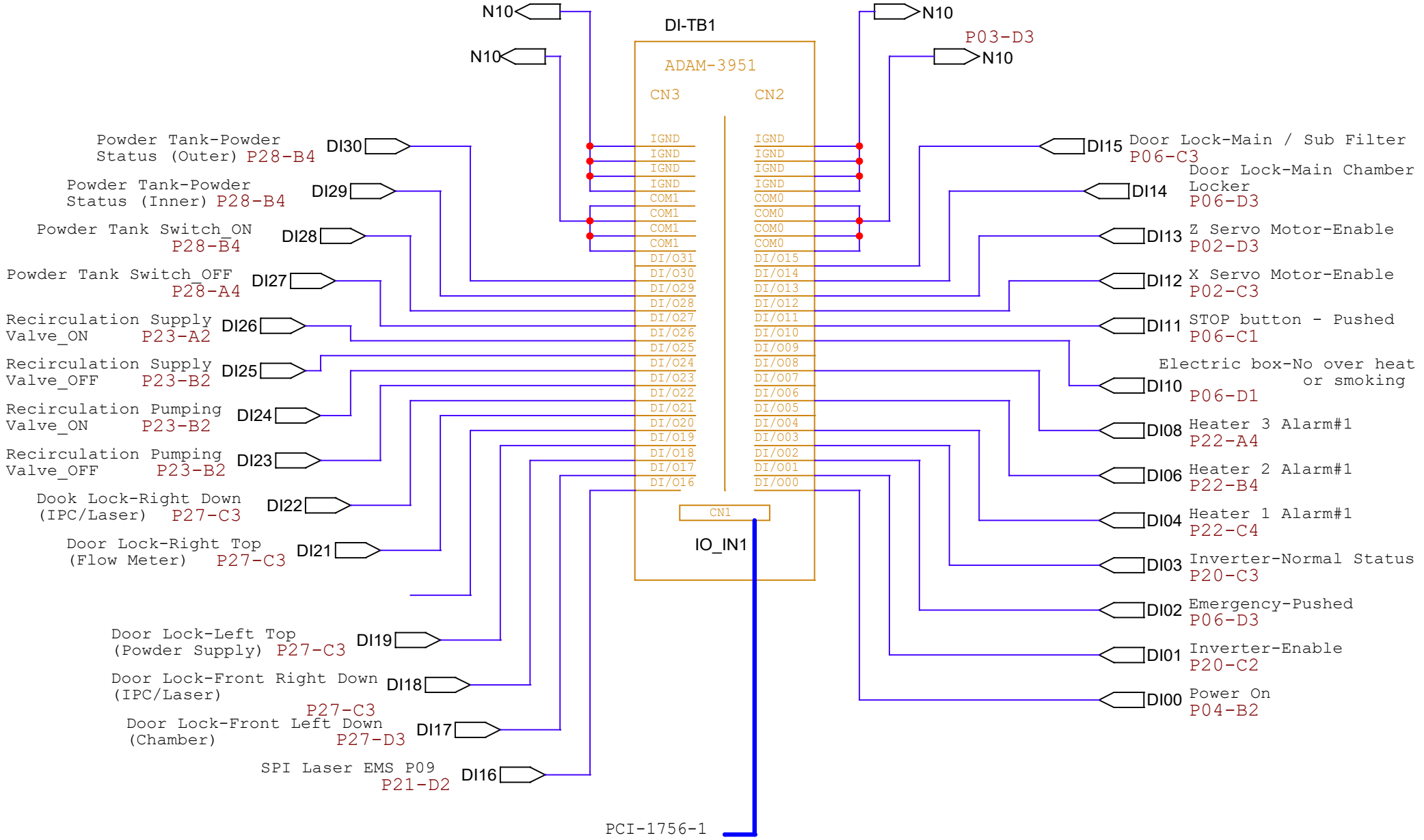

Title: AM450 I/O Input 1		
Size: A	Document Number: P09	Rev: A
Date: Tuesday, April 02, 2024	Sheet 1 of 1	

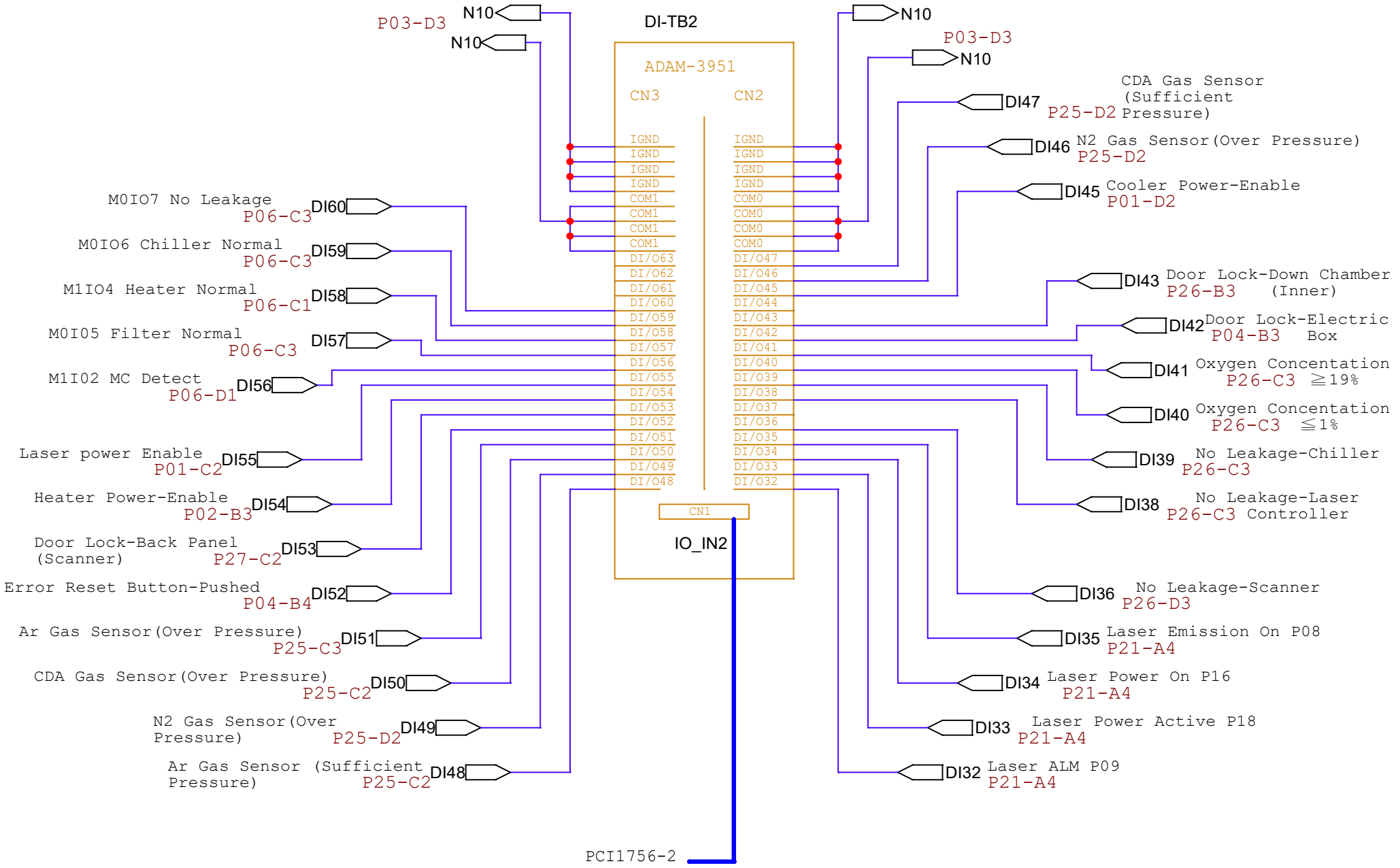

Title	AM450 IO_Input 2	
Size A	Document Number P10	Rev B
Date: Tuesday, April 02, 2024	Sheet 1 of 1	

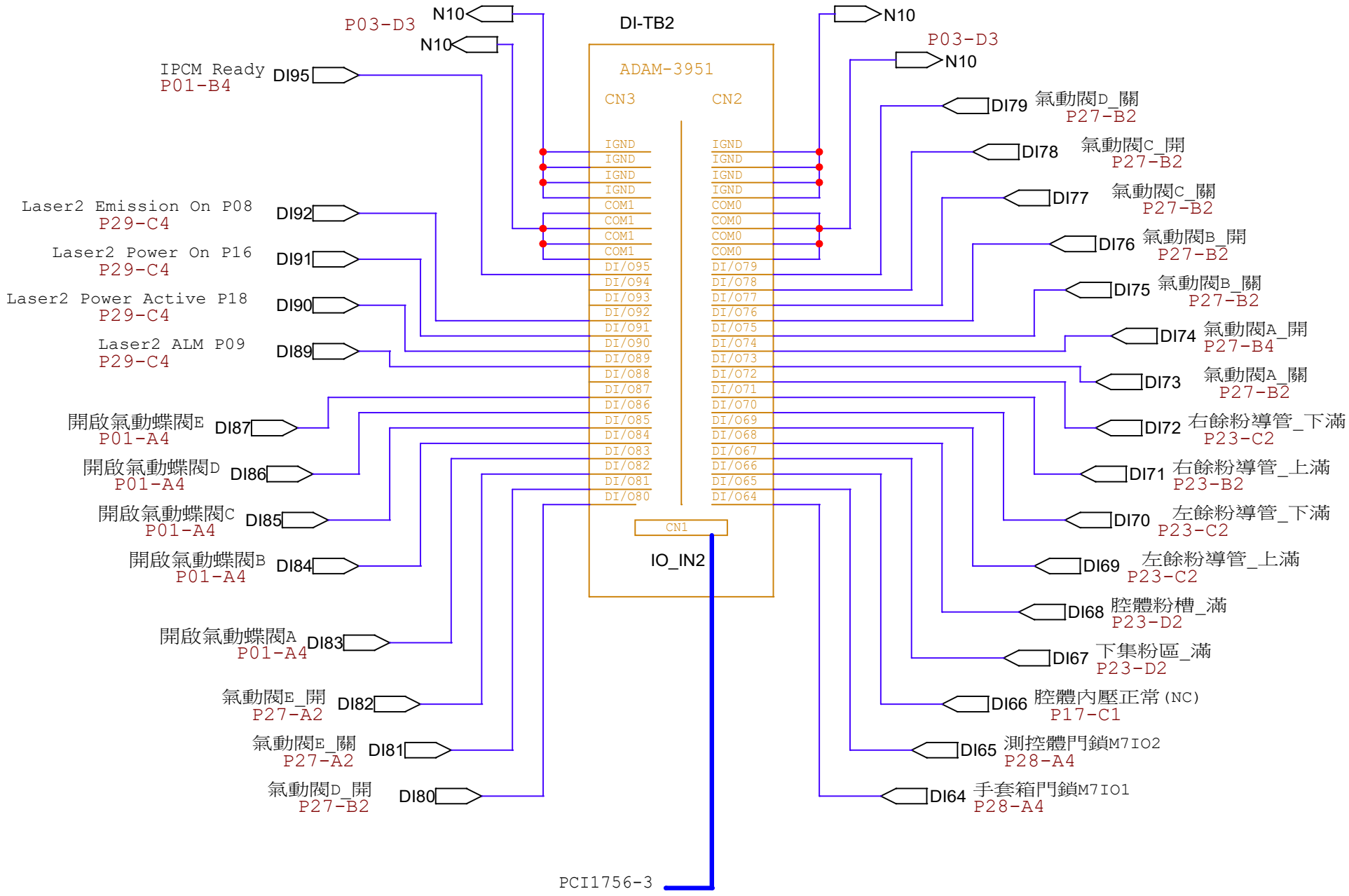

Title	AM450 IO_Input 3	
Size A	Document Number P11	Rev A
Date: Tuesday, April 02, 2024	Sheet 1 of 1	

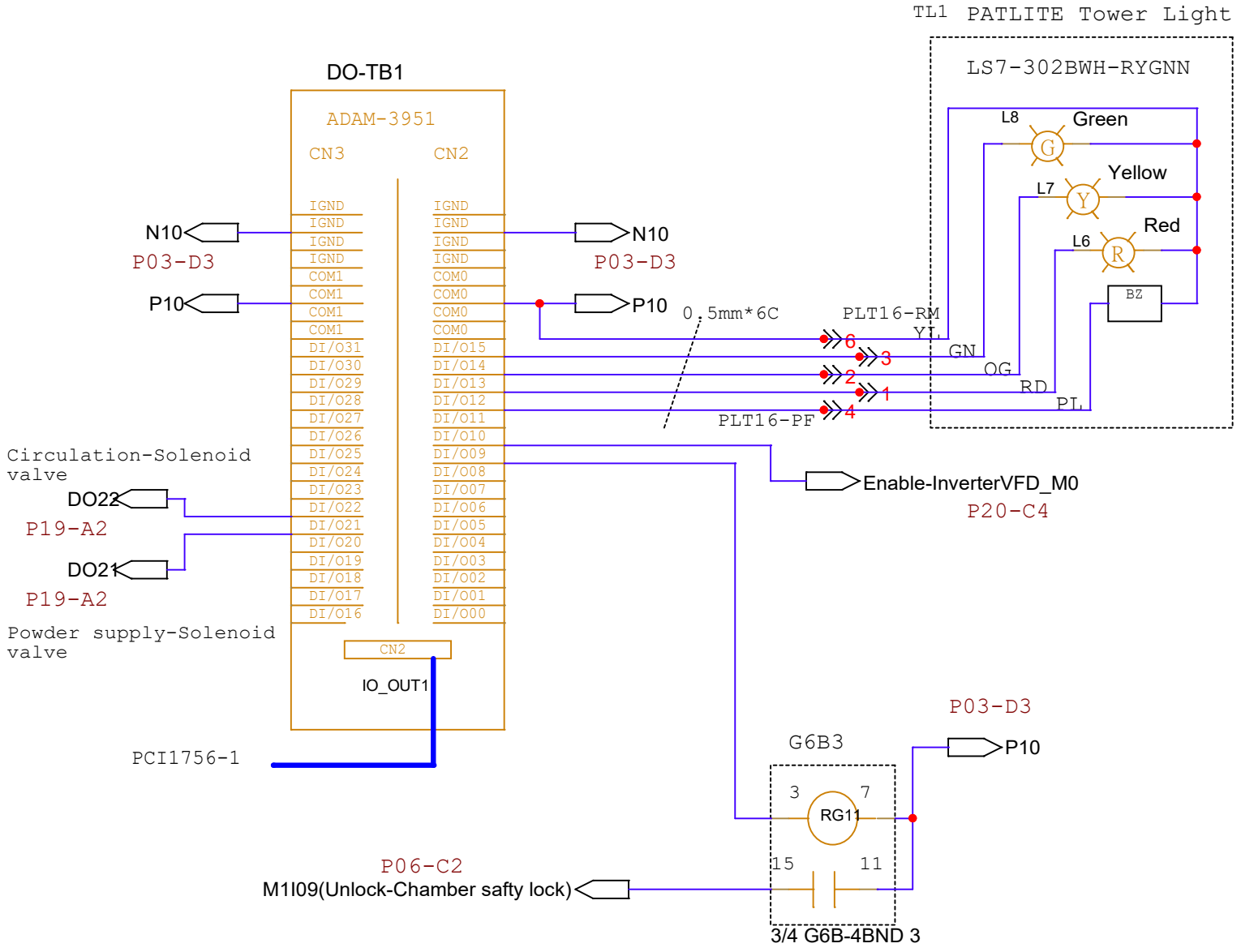

Title	AM450 I/O_Output 1	
Size A	Document Number P12	Rev C
Date: Tuesday, April 02, 2024	Sheet 1 of 1	

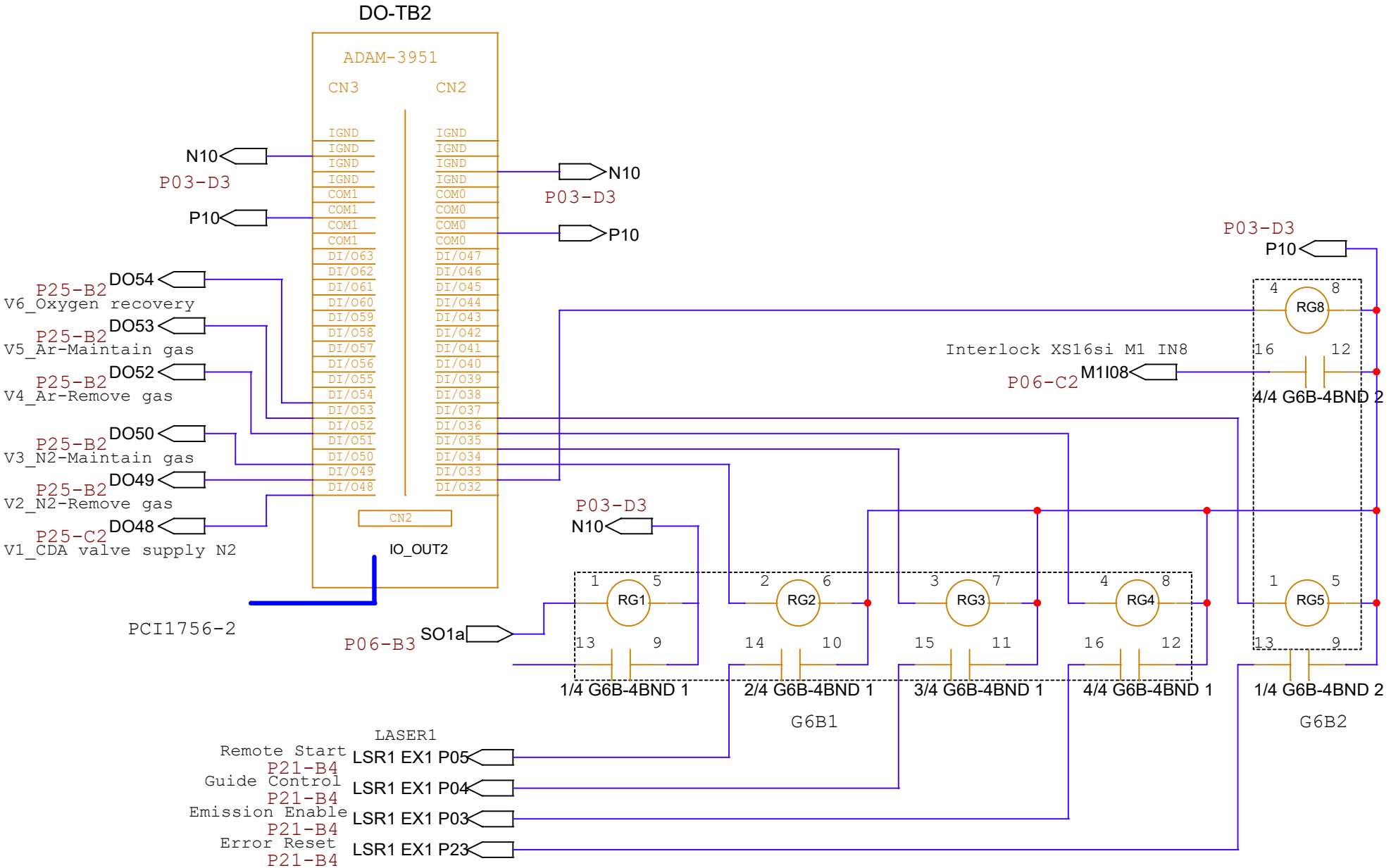

Title	AM450 I/O_Output 2	
Size A	Document Number P13	Rev A
Date: Tuesday, April 02, 2024	Sheet 1 of 1	

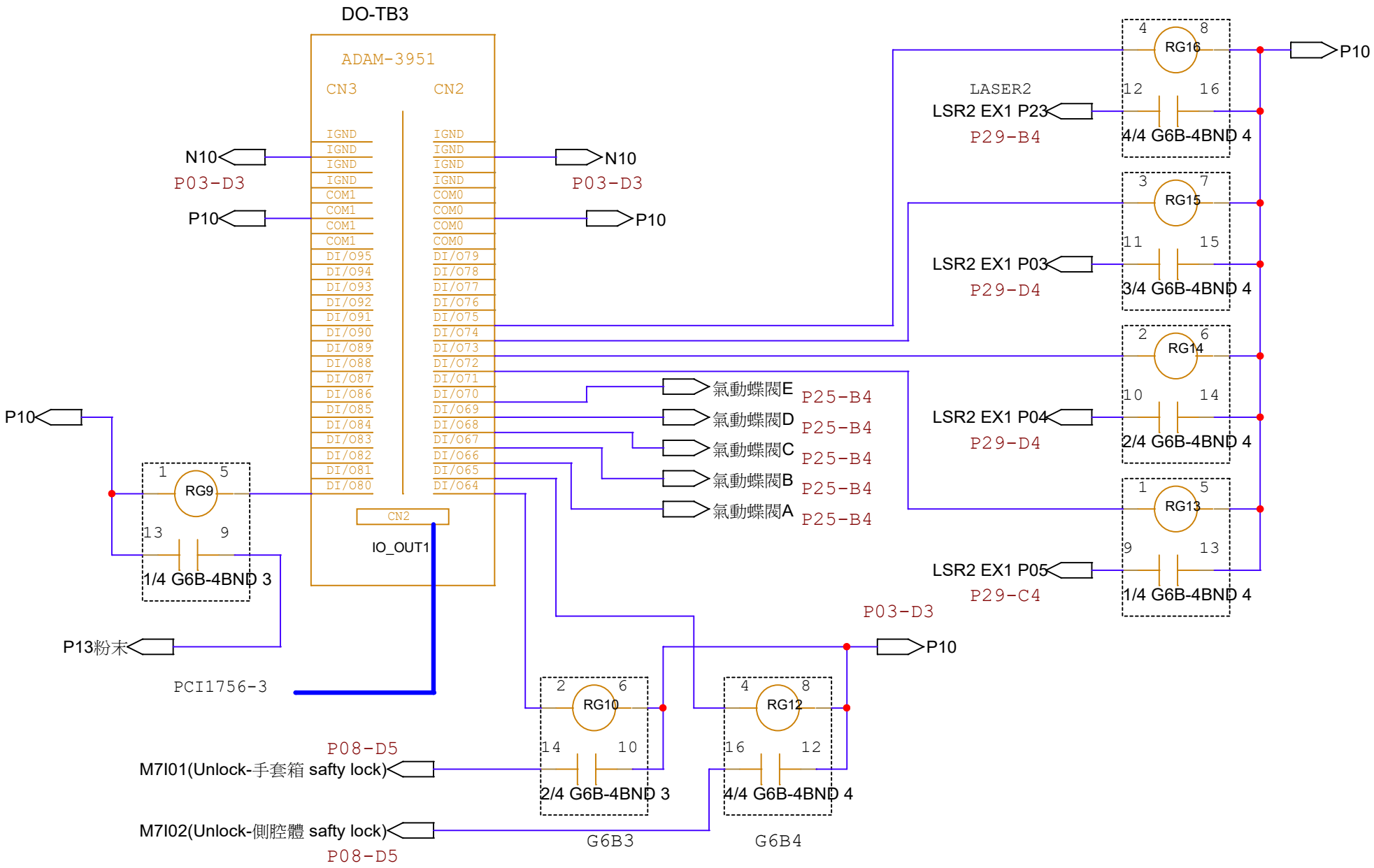

Title	AM450 IO_Output 3	
Size A	Document Number P14	Rev A
Date: Tuesday, April 02, 2024	Sheet 1 of 1	

Signal Convertor *4

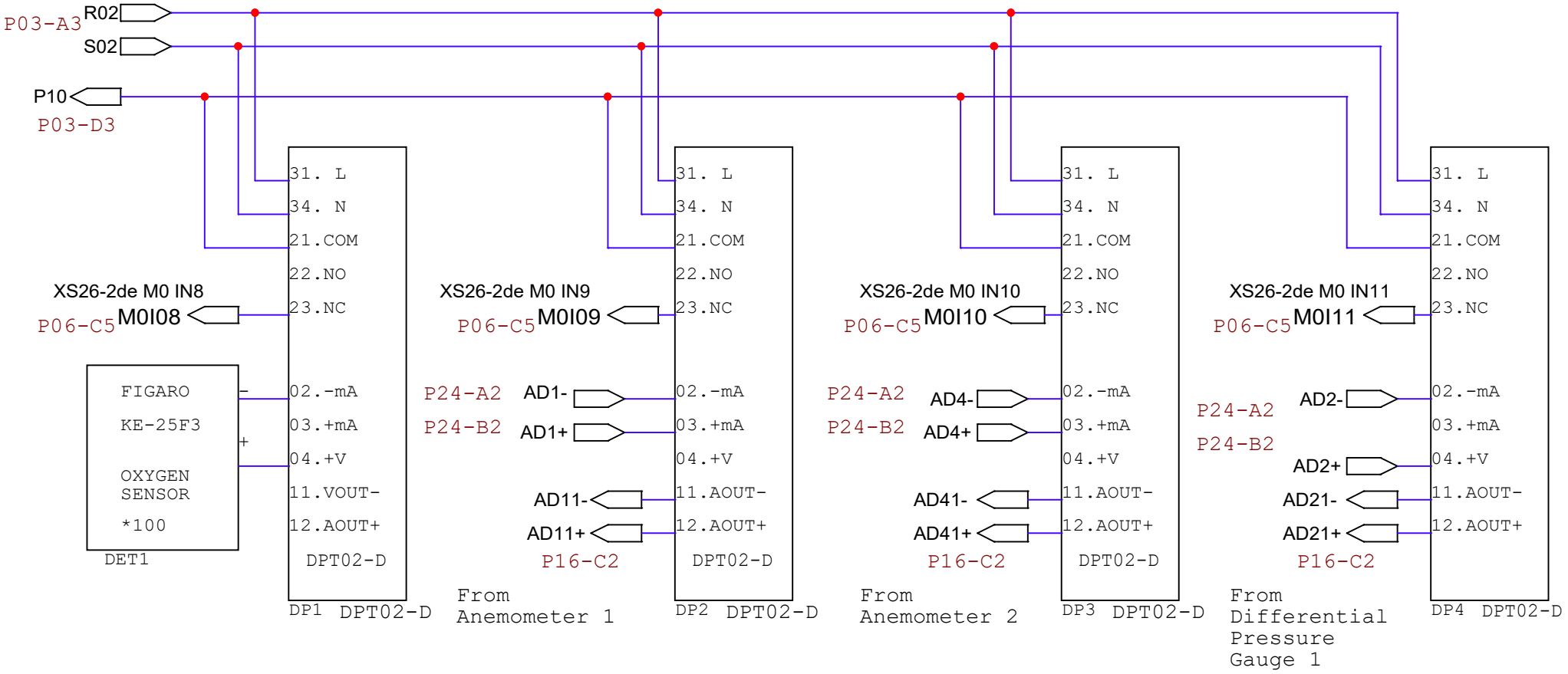

Title	AM450 AD Signal 1	
Size A	Document Number P15	Rev A
Date: Tuesday, April 02, 2024	Sheet 1 of 1	

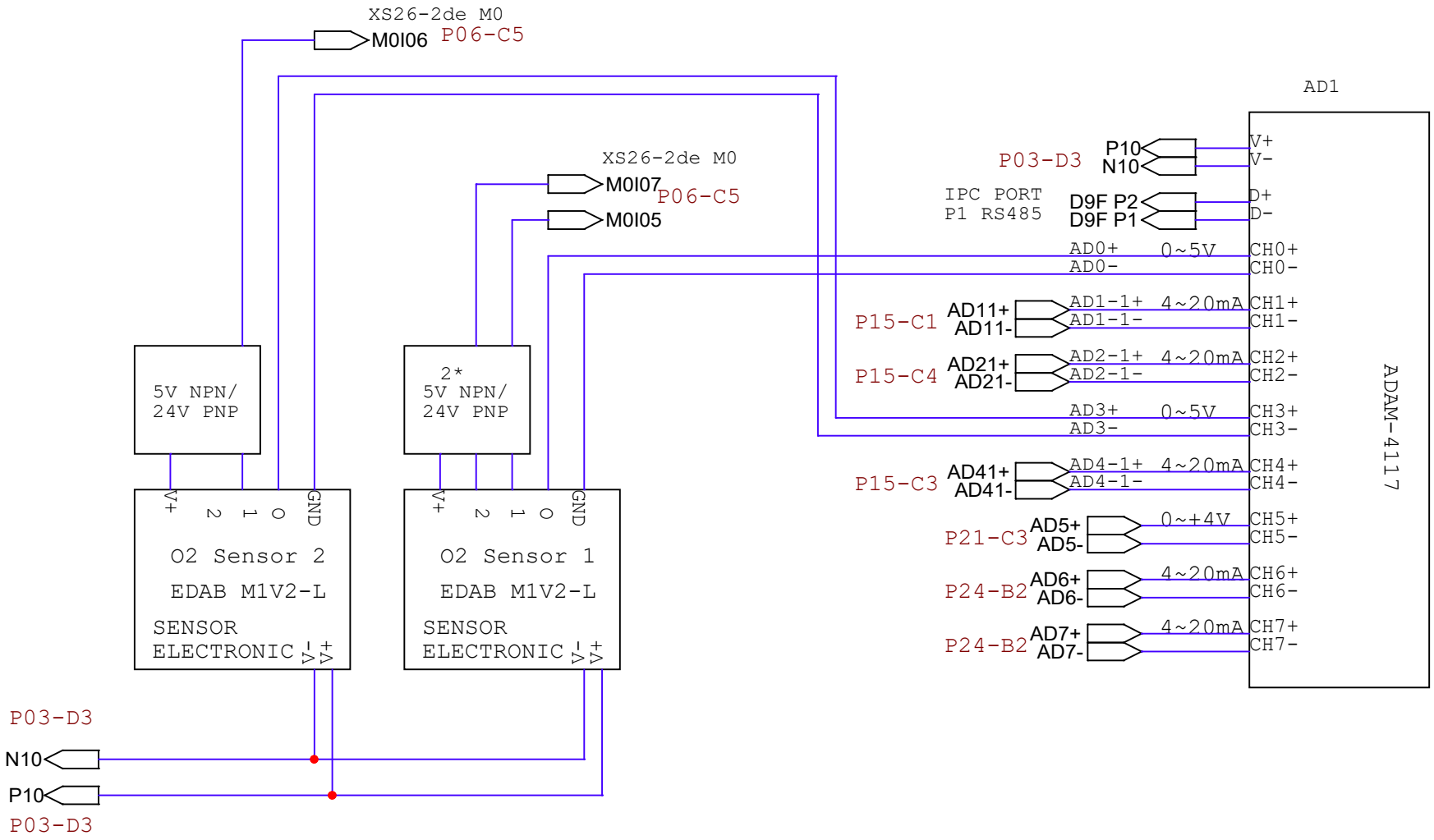

Title	AM450 AD SIGNAL_ADAM-4117	
Size A	Document Number P16	Rev A
Date: Tuesday, April 02, 2024	Sheet 1 of 1	

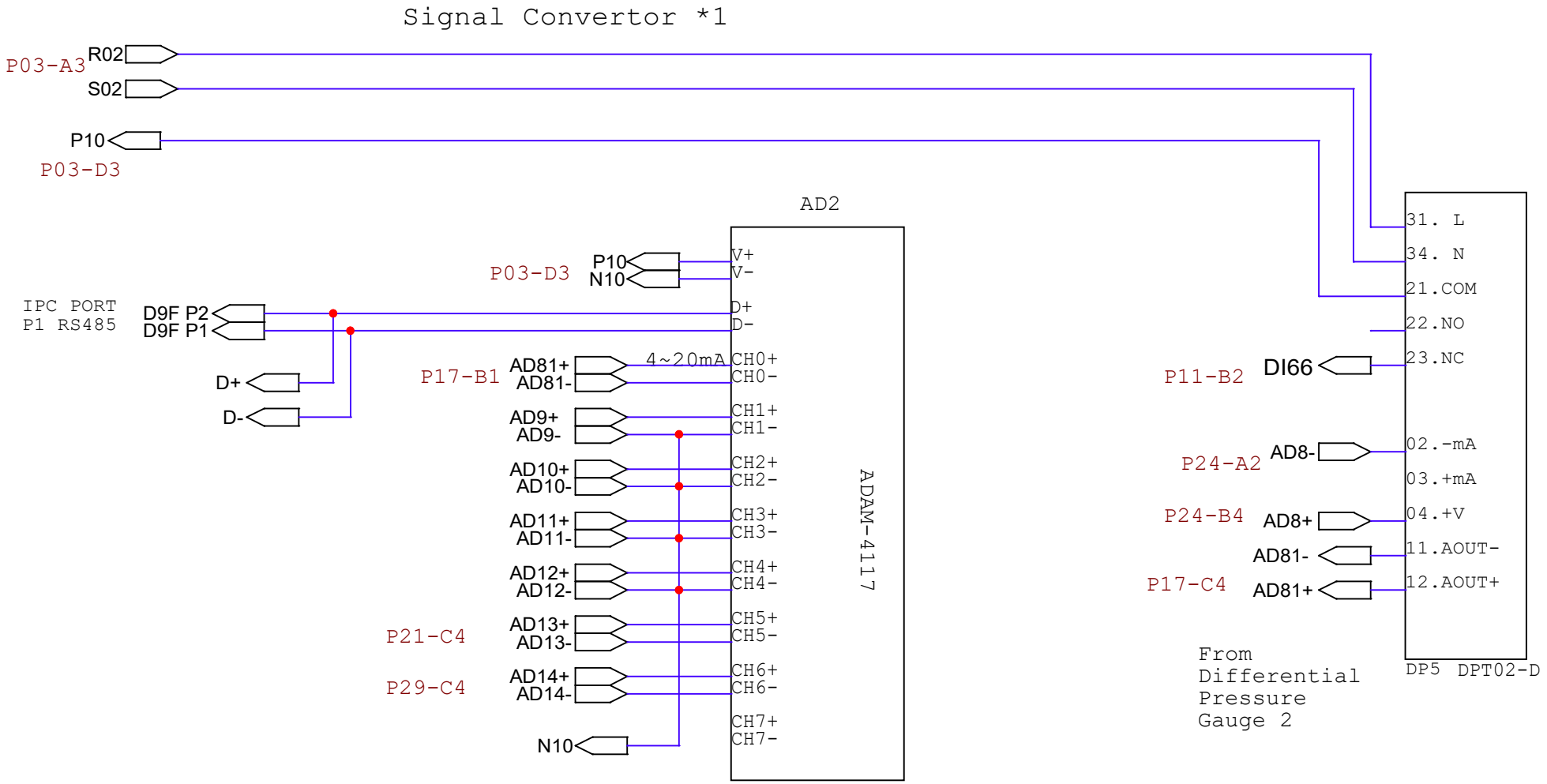

Title	AM450 AD Signal 2	
Size A	Document Number P17	Rev A
Date: Tuesday, April 02, 2024	Sheet 1 of 1	

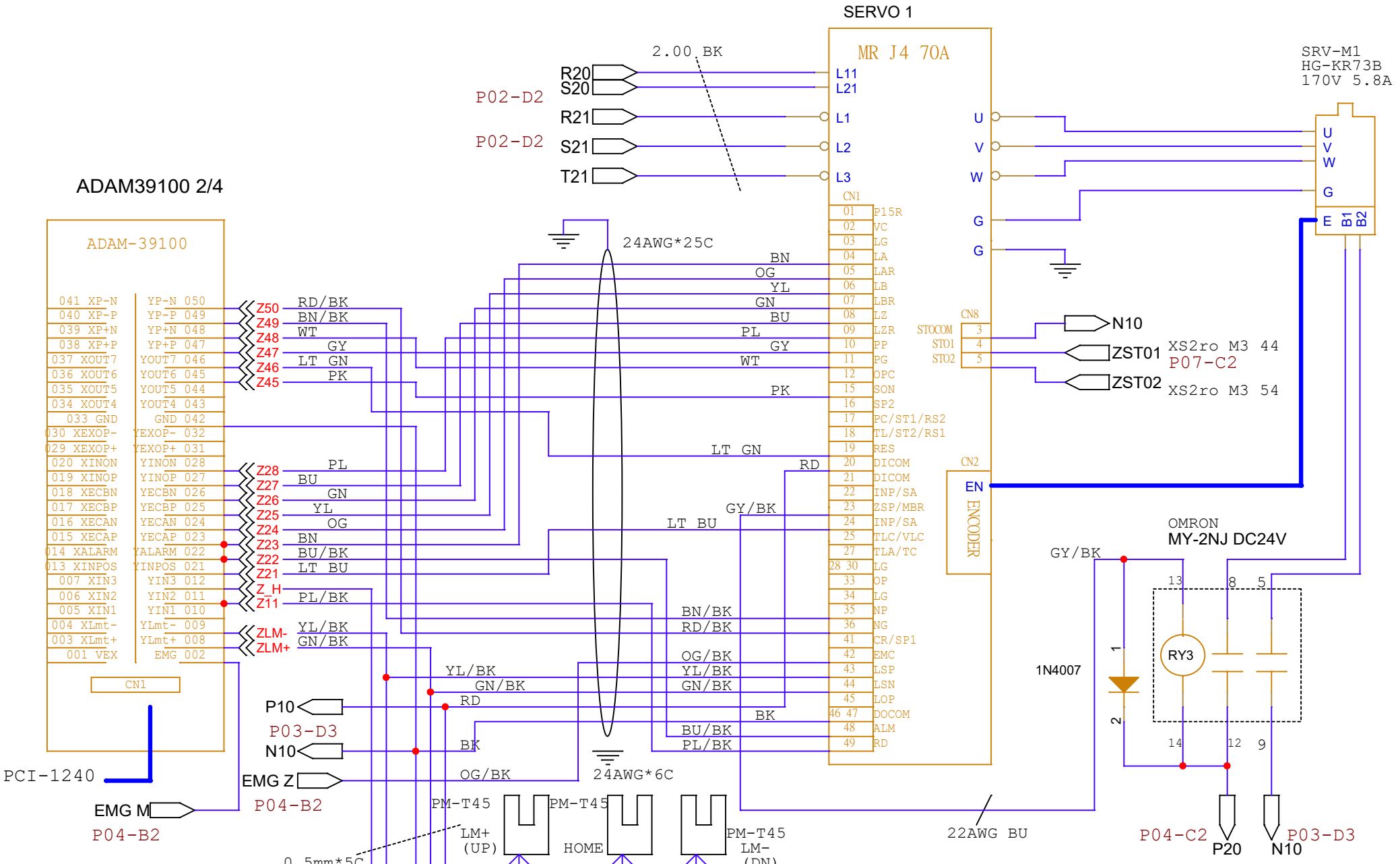

Title

AM450 Z Axis Servo Driver

Size	Document Number	Rev
A	P18	A

Date: Tuesday, April 02, 2024 Sheet 1 of 1

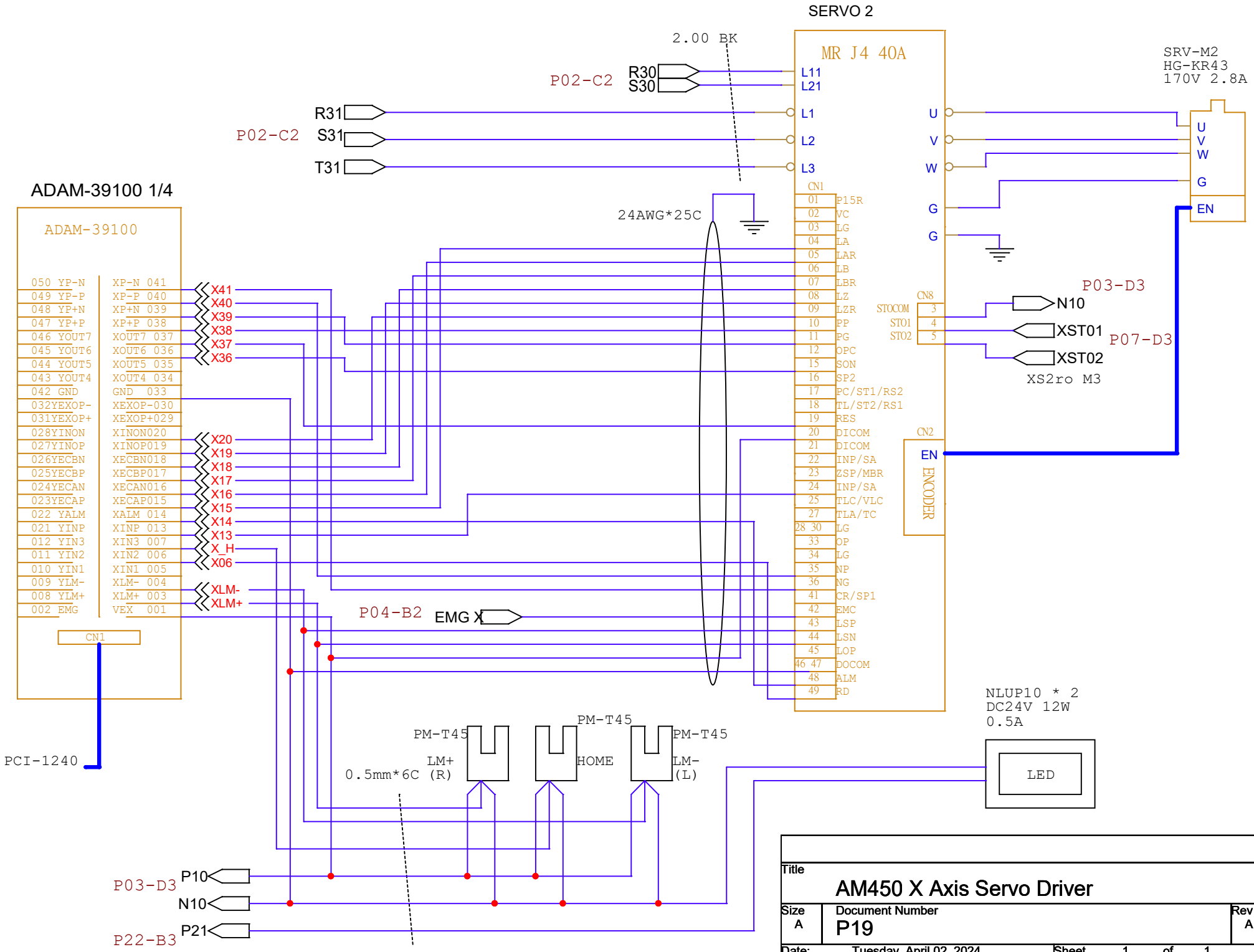

Title	AM450 X Axis Servo Driver	
Size A	Document Number P19	Rev A
Date: Tuesday, April 02, 2024	Sheet 1 of 1	

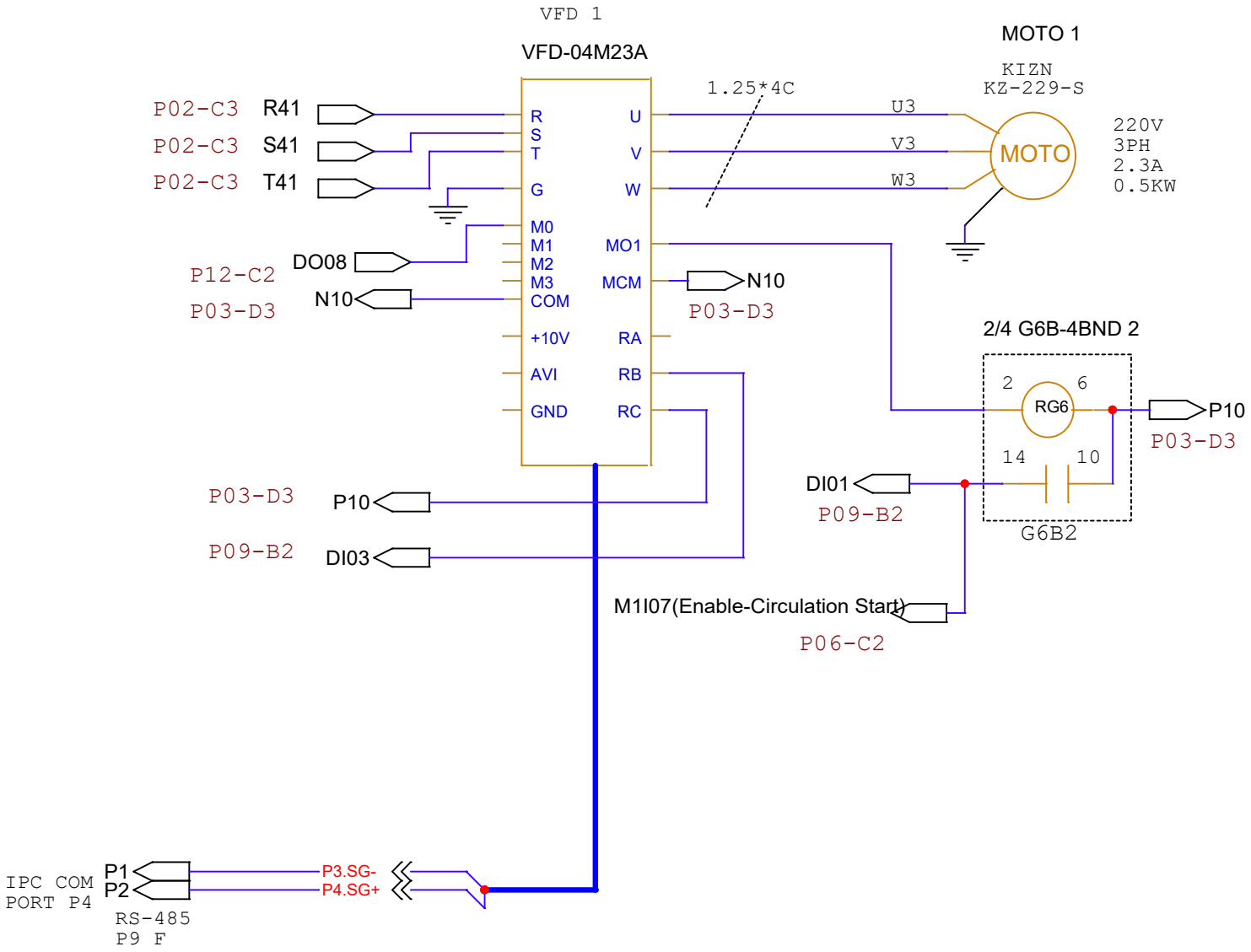

Title	AM450 Inverter	
Size: A	Document Number: P20	Rev: C
Date: Tuesday, April 02, 2024	Sheet 1 of 1	

nLight External Interface 1

HDB26 F

EX1 P01	GATE IN		
EX1 P02			
EX1 P03	EXTEN IN	DO36	
EX1 P04	AIMING LASER	DO35	
EX1 P05	SYSTEM ON	DO34	
EX1 P06	GATE IN 5VRTN	N10	
EX1 P07			
EX1 P08	EMISS	DI35	P10-A2
EX1 P09	ERR	DI32	P10-A2
EX1 P10	GND	N10	
EX1 P11			
EX1 P12			
EX1 P13			
EX1 P14	GND	N10	
EX1 P15			
EX1 P16	RDY	DI34	P10-A2
EX1 P17			
EX1 P18	EXT CONTRL RDY	DI33	P10-A2
EX1 P19			
EX1 P20			
EX1 P21			
EX1 P22			
EX1 P23	CLR ERR	DO37	
EX1 P24	EXT CONTROL EN	P10	
EX1 P25			
EX1 P26			

EX1 P16 → P16-1

nLight External Interface 2

DB25 F

EX2 P01	SAFETY B IN	M2|13
EX2 P02		
EX2 P14	SAFETY B OUT	M2|14
EX2 P15		

nLight Analog

DB15 F

ANA P01	ANA INPUT	P28-B4 RTC5-08A
ANA P09	ISO AGND	RTC5-14A

U5

P10	3	1	P28-B4 RTC5-01A
P16-1	4	2	RTC5-10A

RTC-5 Laser Connector D-15P M

Title	AM450 nLight LASER1		
Size A	Document Number P21		Rev A
Date: Tuesday, April 02, 2024		Sheet 1 of 1	

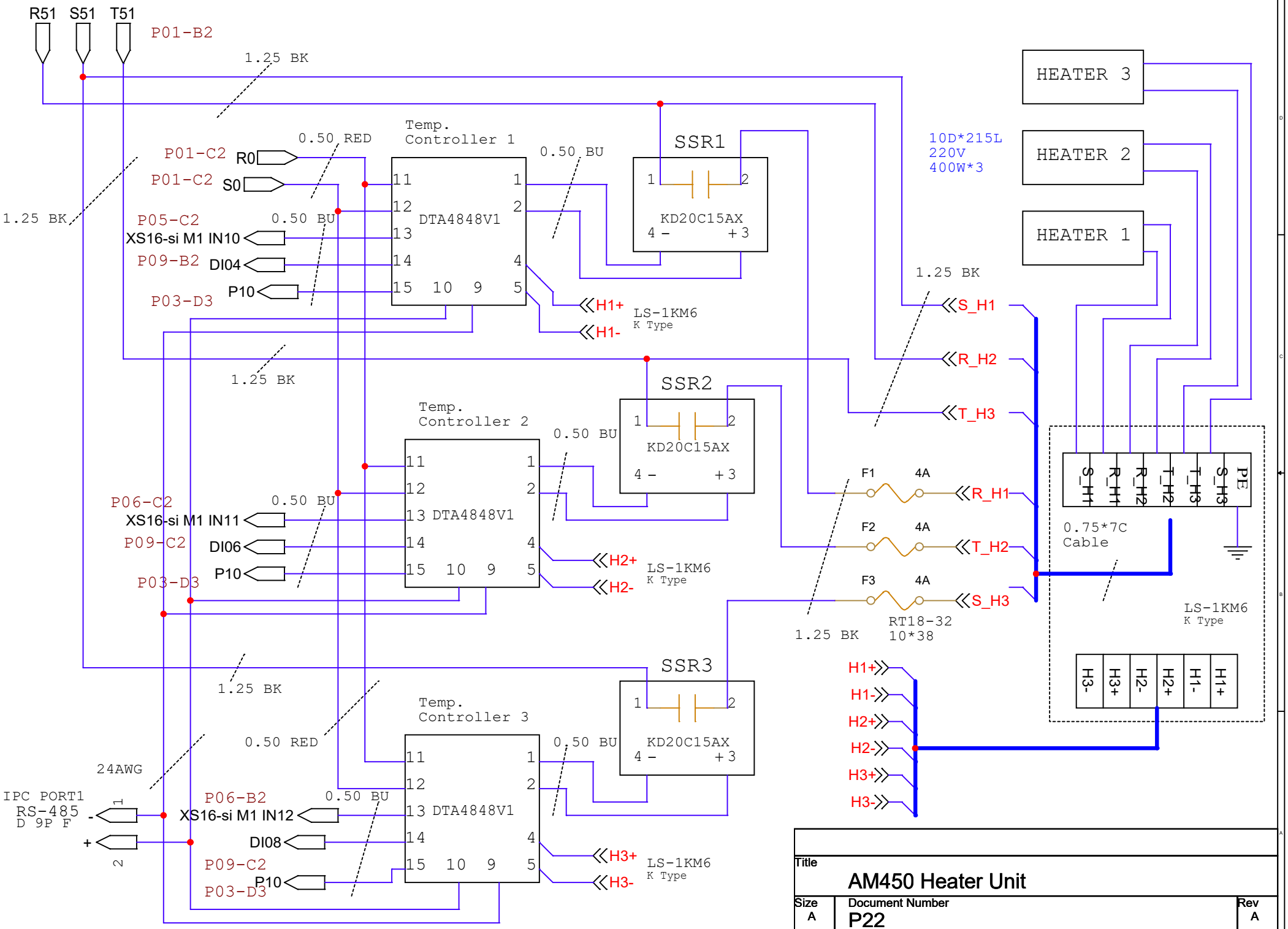

Title	AM450 Heater Unit	
Size A	Document Number P22	Rev A
Date: Tuesday, April 02, 2024	Sheet 1 of 1	

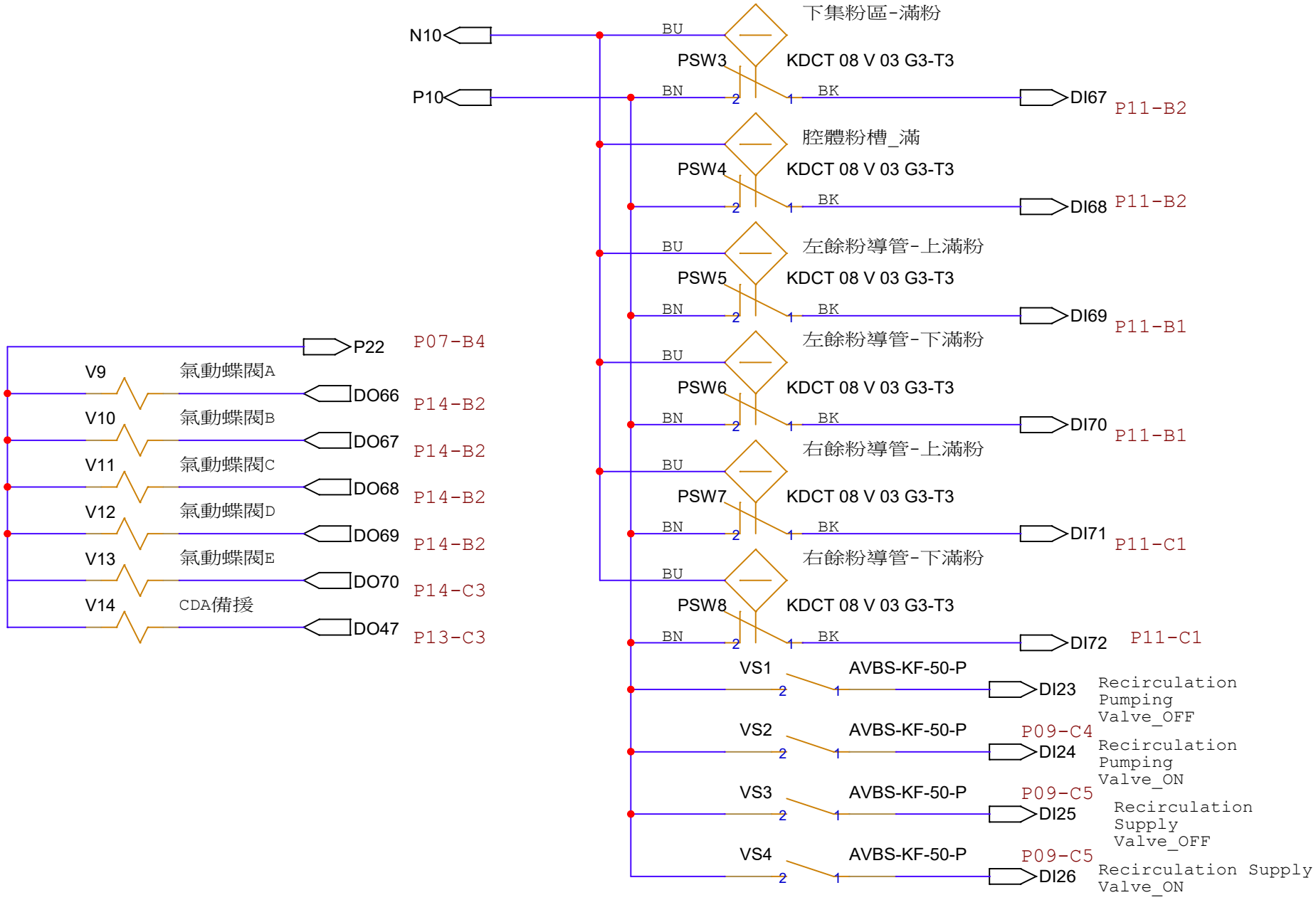

Title	AM450 Terminal Box_1-1	
Size A	Document Number P23	Rev A
Date: Tuesday, April 02, 2024	Sheet 1 of 1	

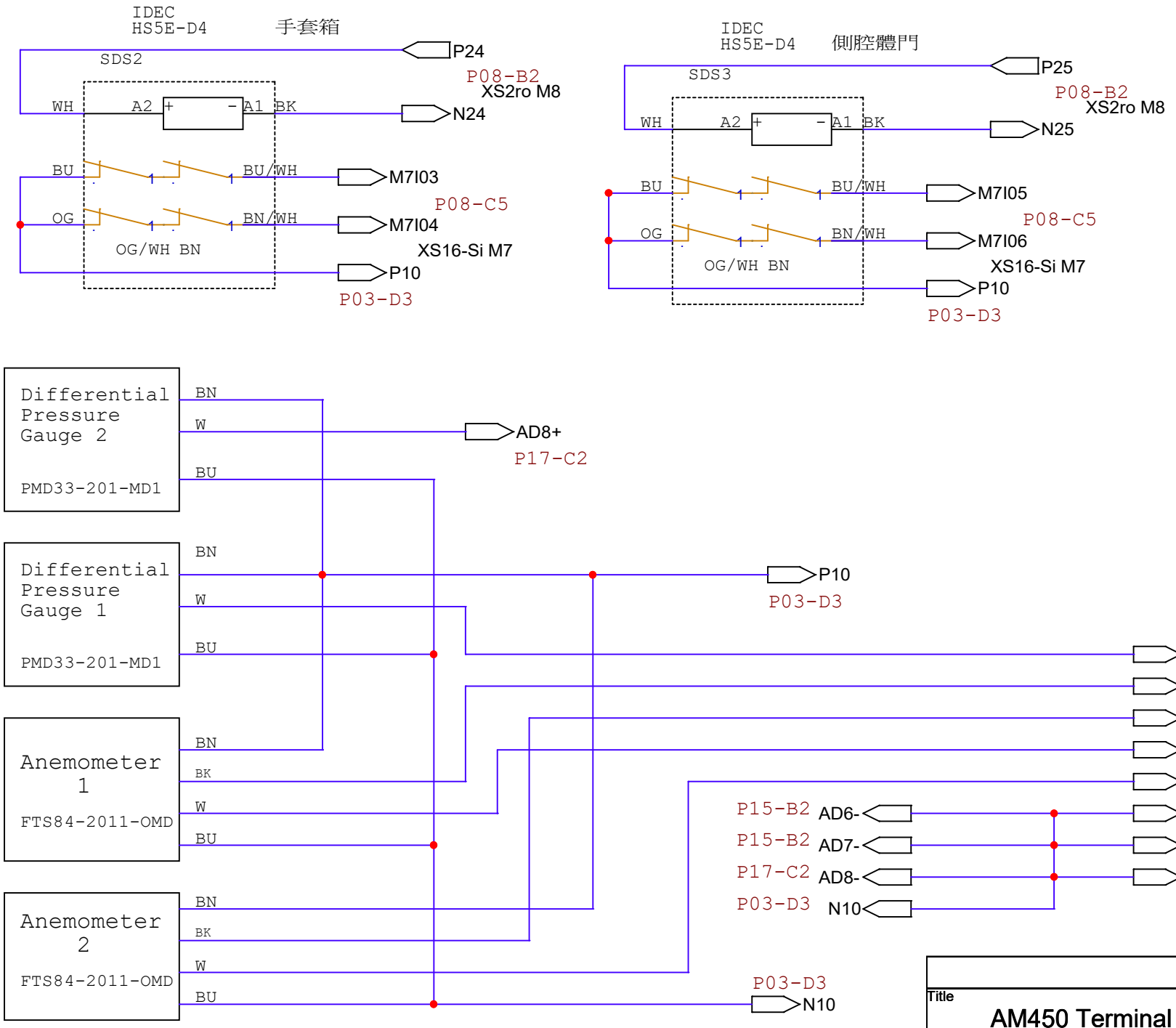

Title	AM450 Terminal Box 1-2	
Size A	Document Number P24	Rev A
Date: Tuesday, April 02, 2024	Sheet 1 of 1	

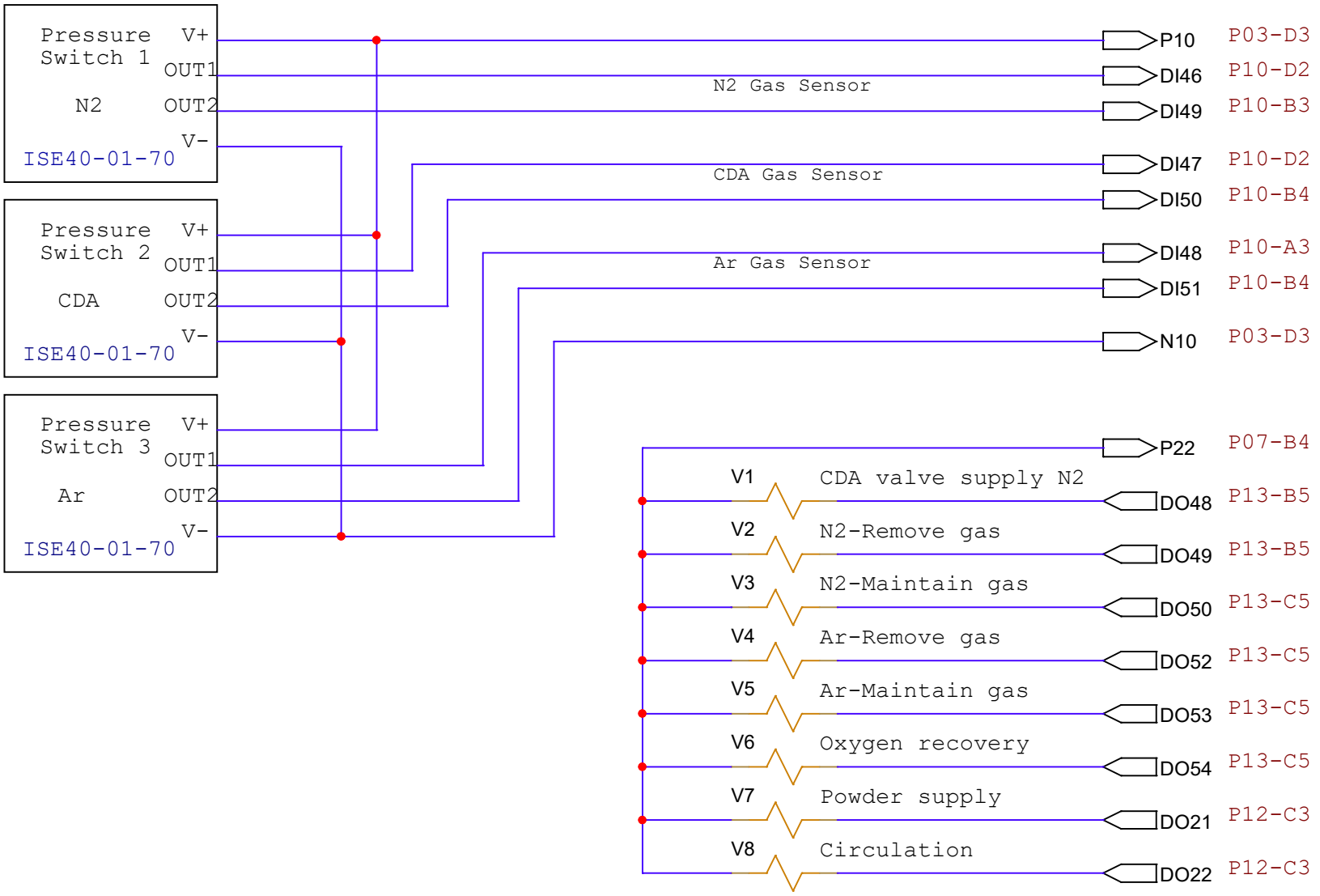

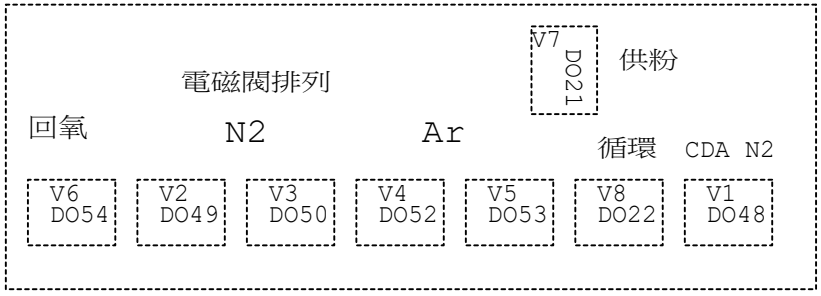

氣動蝶閥ABCDE

V9	V10	V11	V12	V13	V14
DO66	DO67	DO68	DO689	DO70	DO47

Title: AM450 Terminal Box 2		
Size: A	Document Number: P25	Rev: B
Date: Tuesday, April 02, 2024	Sheet 1 of 1	

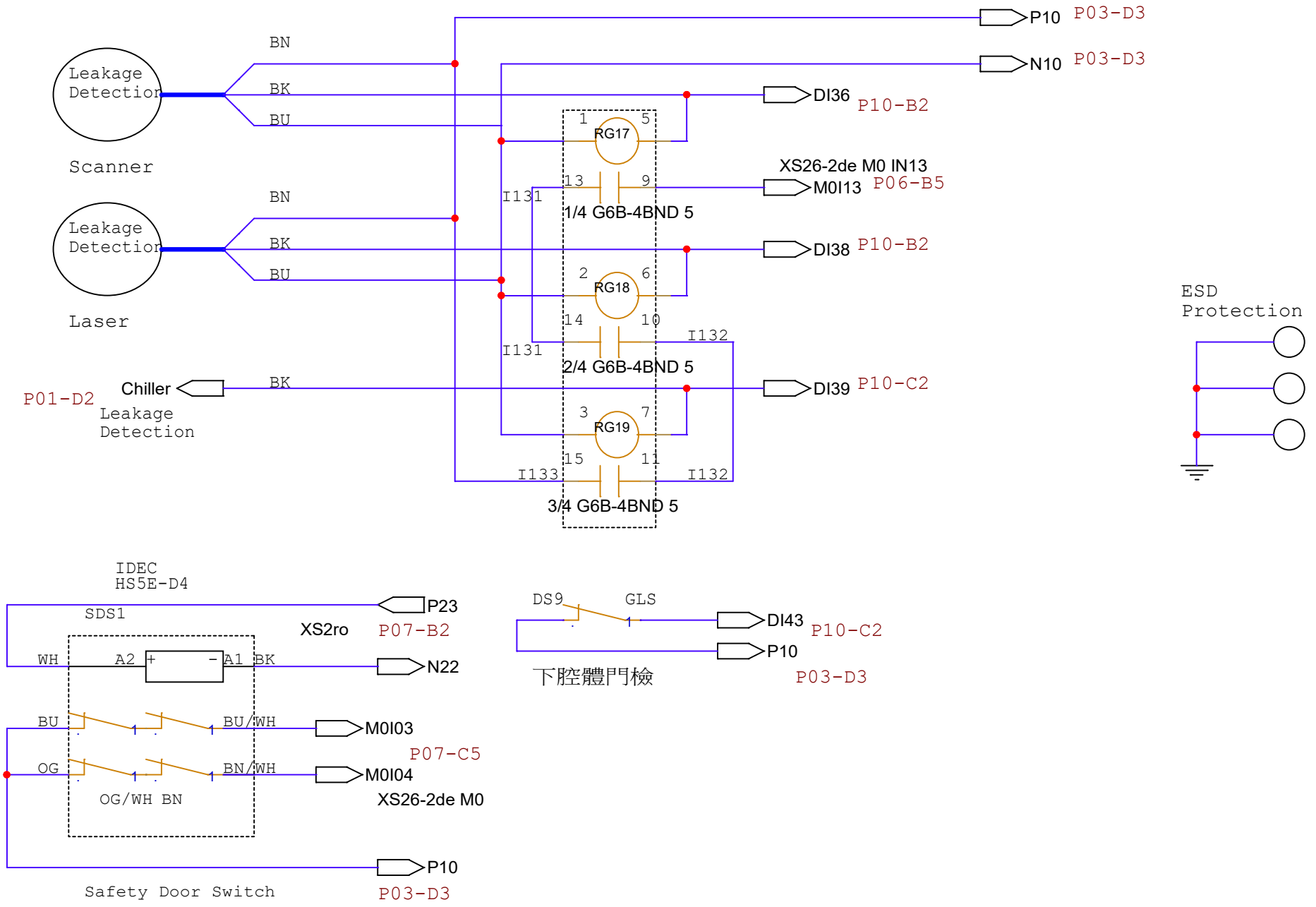

Title	AM450 Terminal_3 Leakage Detection	
Size A	Document Number P26	Rev B
Date: Tuesday, April 02, 2024	Sheet 1 of 1	

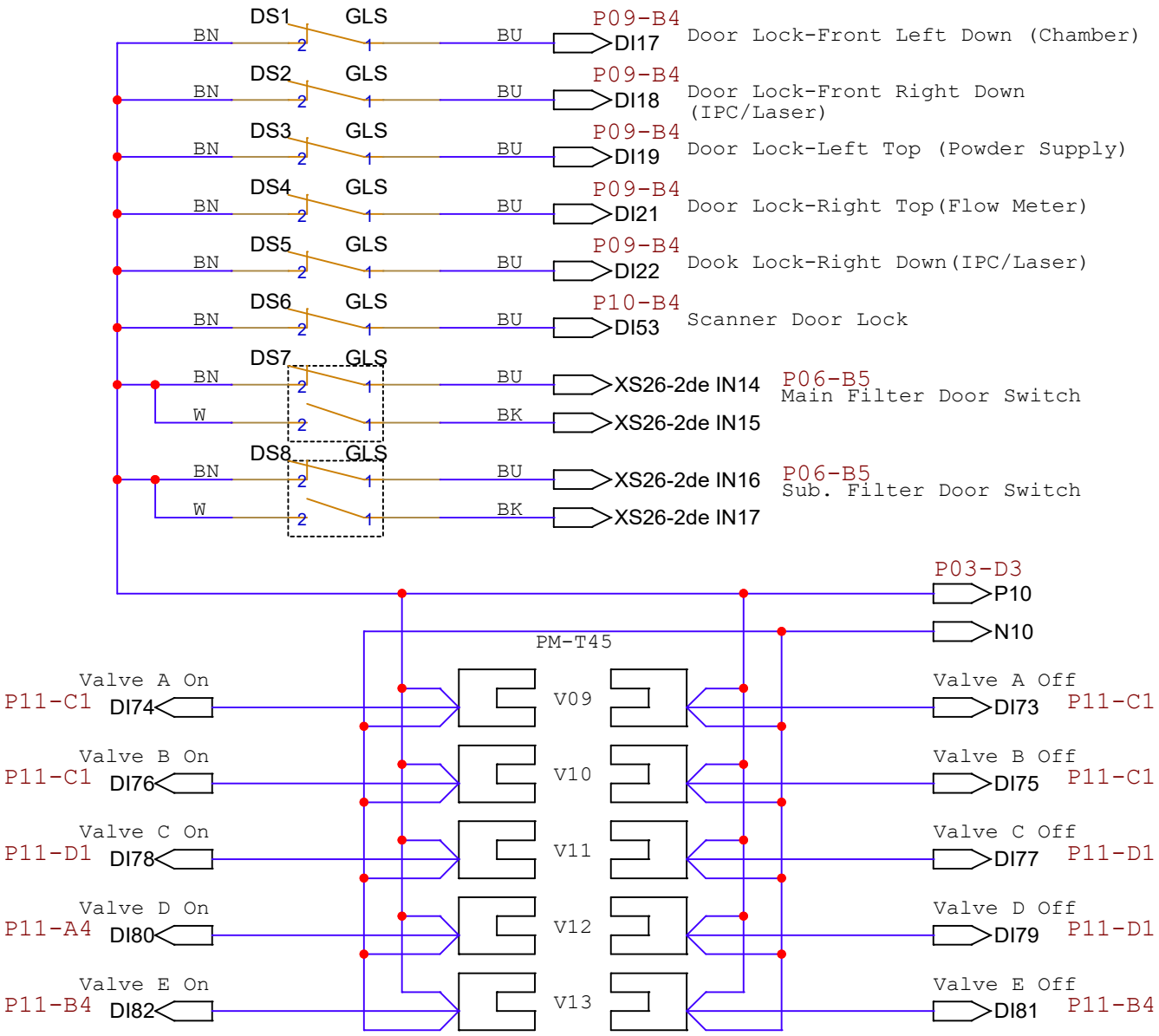

Title	AM450 Terminal Box 4 Door SW	
Size A	Document Number P27	Rev A
Date: Tuesday, April 02, 2024	Sheet 1 of 1	

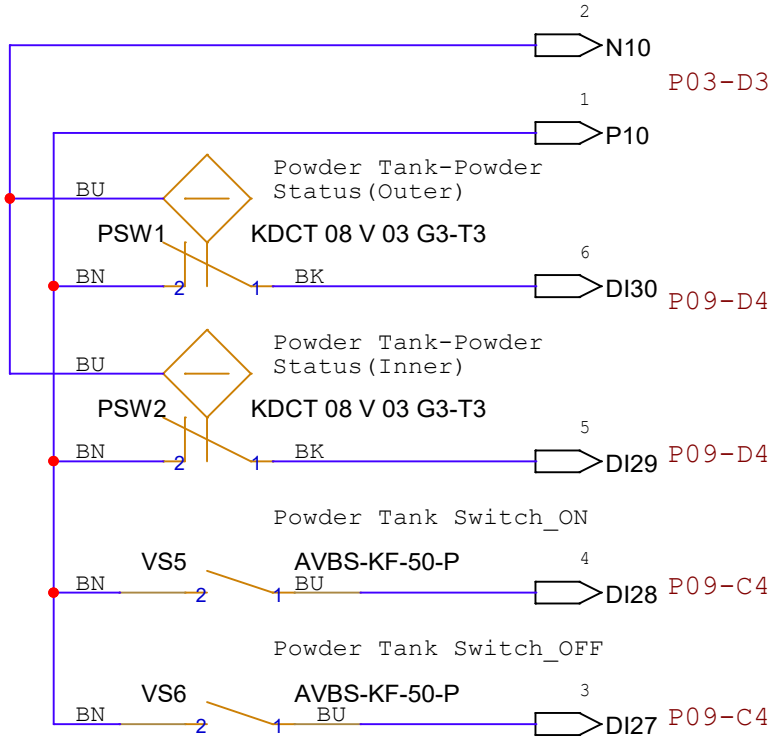

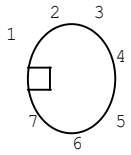

M628-SP-PM-R

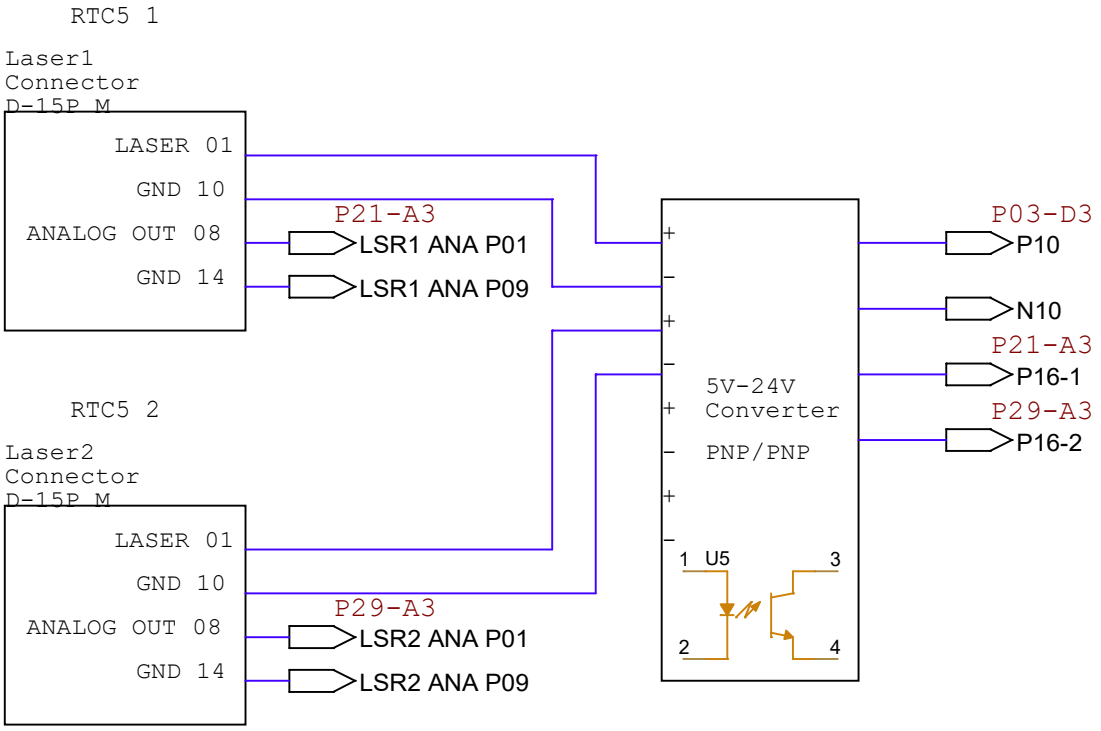

Title	AM450 Terminal 5 & RTC-5	
Size A	Document Number P28	Rev B
Date: Tuesday, April 02, 2024	Sheet 1 of 1	

nLight External Interface 1

HDB26 F

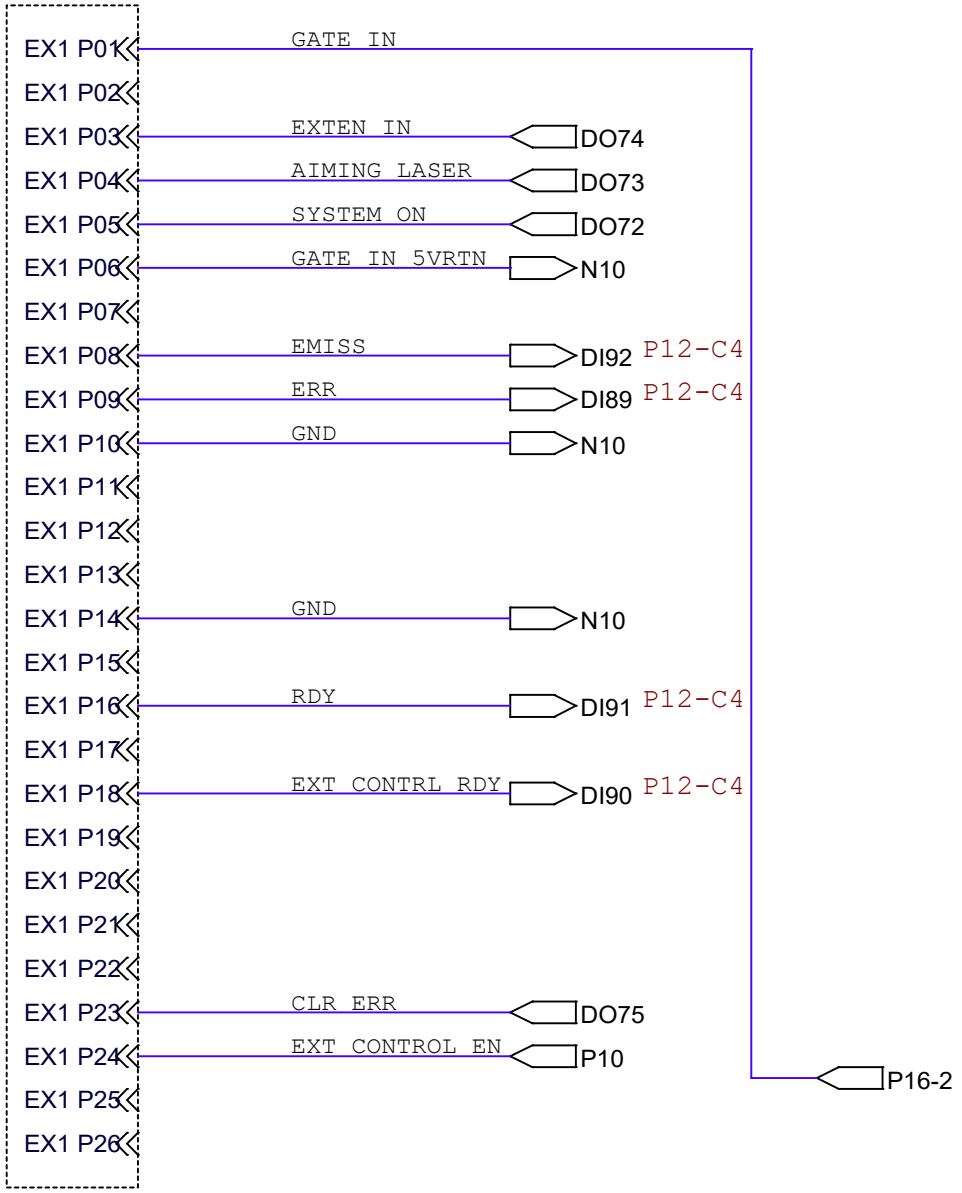

nLight External Interface 2

DB25 F

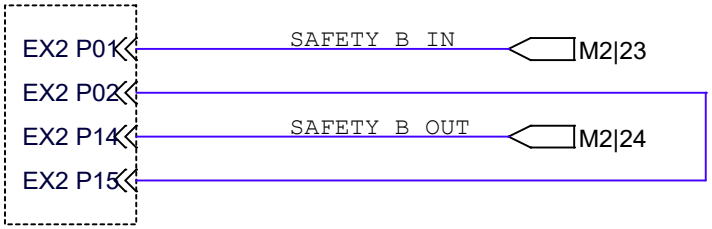

nLight Analog

DB15 F

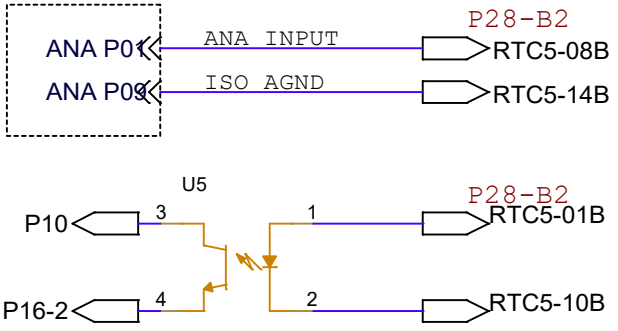

RTC-5 Laser Connector D-15P M

Title: AM450 nLight LASER2		
Size: A	Document Number: P21	Rev: A
Date: Tuesday, April 02, 2024	Sheet 1 of 1	